DEPARTMENT OF SAFETY AND INSPECTIONS
Bob Kessler, Director

CITY OF SAINT PAUL
Christopher B. Coleman, Mayor

375 Jackson Street, Suite 220
St Paul, Minnesota 55101-1806

Telephone: 651-266-9090
Facsimile: 651-266-9124
Web: www.stpaul.gov/dsi

TEST RECORD FOR EXISTING OR NEW FUEL BURNING EQUIPMENT

(Use separate form for each appliance)

Address: _____ Date of Test: _____

Owner: _____

TYPE OF FUEL: Gas _____ Oil _____ Other _____

Make of Furnace/Boiler _____ Model # _____

Serial # _____ Max BTU Input: _____

Equipment venting type: Atmospheric _____ Induced Fan _____ Other _____

Total BTU input of all vented gas appliances into common chimney: _____

Type of Chimney: Masonry _____ Class B _____ Other _____

Type of Liner: None ____ Metal _____ Clay Tile _____ Combustion Air Supply Required? Yes _____ No _____

Safety & Operating Control Tests:	Yes	No
Pilot/Flame Safeguard Operating Properly	___	___
Limit(s) Operating Properly	___	___
Operator(s) Operating Properly	___	___
Low Water Cut-Off Operating Properly	___	___

Fuel Analysis/Flue Gas Analysis:	Yes	No
Vents Properly Without Spillage	___	___
Flame Stays Inside/Doesn't Roll Out	___	
Burner Lights Smoothly	___	___
All Controls Operating Properly	___	___

	Initial	Final
Stack Temperature	____ ^{0}F/Net	____ ^{0}F/Net
Oxygen	____ %	____ %
Carbon Dioxide	____ %	____ %
Carbon Monoxide	____ %/ppm	____ %/ppm

Visual Inspection	Yes	No
Fuel Piping System - OK?	___	___
Vent Systems - Drafthood?	___	___
Connector, Vent Chimney - OK?	___	___
Heating Unit Safe?	___	___

Look At Total Heating System Before You Leave:

Does system operate safely and properly? Yes ____ No _____

COMMENTS: _____

Name of Licensed Contractor: _____ Phone # _____

Address: _____

Person Conducting Test: _____
(Print Name) (Signature)

City of Saint Paul Certificate of Competency card number for appropriate fuel: _____

Revised: 05/16/08

1. All hazardous, improper and/or illegal wiring shall be removed or rewired to the present Electrical Code. This will include other buildings on the property such as garages, sheds, etc.

2. Minimum size for all new services for single residential occupancies shall be 100 ampere, 240 volt.

3. No additions or extensions will be allowed on an existing 30 ampere service.

4. The following are the minimum requirements for a new service installation:

a. Electrical outlets required: Every habitable room 120 square feet or less in area, of a dwelling or dwelling unit of a multiple dwelling shall contain at least two (2) separate and remote duplex outlets. An additional duplex outlet shall be required for each additional 80 square feet or fraction thereof. Most new outlets must be Arc-Fault Circuit Interrupter (AFCI) protected (see Section 210.12 of the 2008 National Electrical Code).

b. In kitchens, three (3) separate and remote duplex outlets shall be required. At least one of the required duplex outlets shall be supplied by a separate twenty (20) ampere circuit. Any new receptacle installed for the counter top shall be of the ground-fault circuit interrupter (GFCI) type.

c. Every public hall, water closet compartment, bathroom, laundry room and furnace room shall contain at least one electric light fixture. In addition to the light fixture, every bathroom and laundry room must have at least one (1) duplex outlet. The required duplex outlet in each laundry room must be on a separate twenty (20) ampere circuit. The required duplex outlet in each bathroom must be of the ground-fault circuit interrupter(GFCI) type. Any existing outlets in any bathroom must be converted to a GFCI-protected outlet or removed. The required GFCI outlet in the bathroom must be immediately adjacent to the sink. If a bathroom is added or gutted as part of an update, a 20 ampere circuit will be required per NEC 210.11(C)(3).

d. Every common hall and inside stairway in every residential structure or dwelling unit shall be adequately lit with an illumination of at least five (5) lumens per square foot in the darkest portion of the normally traveled stairs and passageways.

e. All exterior exits and entryways are required to be illuminated a minimum of one (1) footcandle at grade level for security.

f. Exterior lighting at garages and surface parking areas of multi-unit (three(3) or more units) buildings is required to be adequate so as to not endanger health or safety. An average of one(1) footcandle at the pavement is required. Exterior lighting must be in conformance with other City Codes and Ordinances.

g. Basement: One lighting outlet is required for each 200 square feet of floor space. At least one of the required basement lighting outlets shall be switched from the head of the stairs. Any new outlet installed in the basement must be a GFCI-type unless for a dedicated appliance per NEC 210-8(a)(5).

h. Smoke Detectors:1. All single-family dwellings shall have a hard-wired (120 volt electrical, not battery) **battery-backup** smoke detector installed near (not in) the bedrooms. If there are legal bedrooms on more than one level, the detector shall be installed on the level that has the greater number of bedrooms. If there are an equal number of bedrooms on more than one level, the detector shall be installed on the upper level near the bedrooms. **2.**If the project includes building construction that requires a Building Permit, additional hard-wired interconnected and/or battery-type smoke detectors are required per the Building Code. Contact the Building Inspectors at (651) 266-9002 (7:30-9:00am M-F) to determine what additional detectors are needed.

5. All metallic light fixtures (luminaires), if within five(5) feet horizontally or eight(8) feet vertically of grounded surfaces (metallic piping, concrete floor, etc.) must be grounded. Some examples would be bathroom lights, the light over the kitchen sink and similar.

6. Residential closet lights: All closet lights must either be a florescent fixture (luminaire) or an enclosed incandescent fixture of the types required by the present Electrical Code. Fixtures must not be directly over the storage area in a closet: they must either be moved or eliminated and blanked off.

7. Service conduits run in outside walls: If a 100-ampere service is changed from fuses to circuit breakers, the meter is already outside, and the existing conduit is run in the outside wall, the conduit may be re-used. If the service is an upgrade (increase in amperage), conduit in the wall **may not** be re-used.

DEPARTMENT OF SAFETY AND INSPECTIONS
Bob Kessler, Director

CITY OF SAINT PAUL
Christopher B. Coleman, Mayor

375 Jackson Street, Suite 220
Saint Paul, Minnesota 55101-1806

Telephone: 651-266-9007
Facsimile: 651-266-9124
Web: www.stpaul.gov/dsi

Stairways and Handrails for Residential Structures

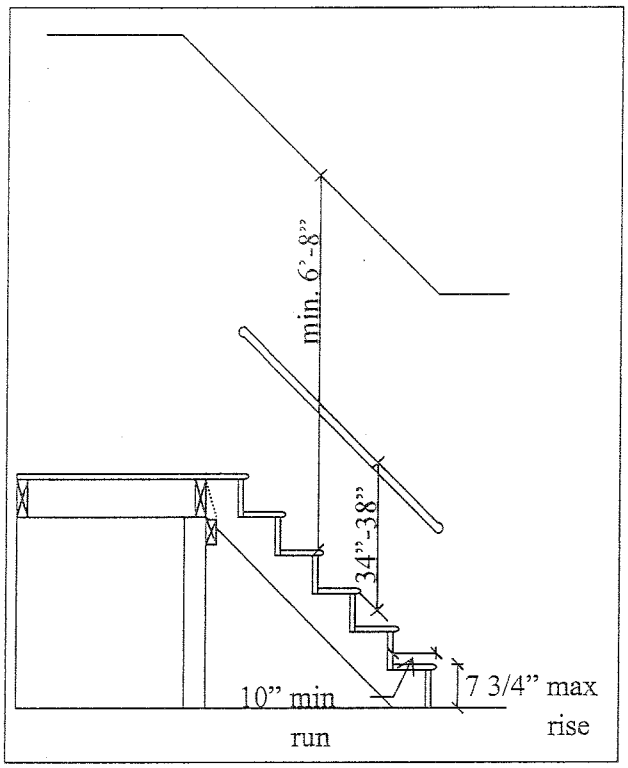

R311.5 Stairways

Width: Stairways shall not be less than 36" in clear width at all points above the permitted handrail height and below the required headroom height. Handrails shall not project more than 4-1/2" on either side of the stairway and the minimum clear width of the stairway at and below the handrail height, including treads and landings, shall not be less than 31-1/2" where a handrail is installed on one side and 27" where handrails are provided on both sides.

Treads and Risers: The max riser height is 7 3/4" and the min tread depth shall be 10". The riser height shall be measured vertically between leading edges of the adjacent treads. The tread depth shall be measured horizontally between the vertical planes of the foremost projection of adjacent treads and at a right angle to the tread's leading edge. The walking surface of treads and landings of a stairway shall be sloped no steeper than 1:48(2%). The greatest riser height within any flight of stairs shall not exceed the smallest by more than 3/8". The greatest tread depth within any flight of stairs shall not exceed the smallest by more than 3/8".

Headroom: The min headroom in all parts of the stairway shall not be less than 6'-8" measured vertically from the sloped plane adjoining the tread nosing or from the floor surface of the landing of platform.

Landings (R311.5.4): There shall be a floor or landing at the top and bottom of each stairway, except at the top of an interior flight of stairs provided a door does not swing over the stairs. The width of each landing shall not be less than the stairway served. Every landing shall have a minimum dimension of 36" measured in the direction of travel.

Guards (R312): Porches, balconies or raised floor surfaces located more than 30" above the floor or grade below shall have guards not less than 36" in height. Open sides of stairs with a total rise of more than 30" above the floor or grade below shall have guards not less than 34" in height measured vertically from the nosing of the treads. Required guards on open sides of stairways, raised floor areas, balconies and porches shall have intermediate rails or ornamental closures that do not allow passage of a sphere 4" in diameter.

> Exception: The triangular openings formed by the riser, tread and bottom rail of a guard at the open side of a stairway are permitted to be of such a size that a sphere 6" cannot pass through.

(See Reverse for Handrails)

Section R311.5.6 Handrails

Handrails: Handrails having minimum and maximum heights of 34" and 38", respectively, measured vertically from the nosing of the treads, shall be provided on at least one side of stairways. All required handrails shall be continuous the full length of the stairs with 4 of more risers from a point directly above the top riser of a flight to a point directly above the lowest riser of the flight. Ends shall be returned of shall terminate in newel posts or safety terminals. Handrails adjacent to a wall shall have a space of not less than 1-1/2" between the all and the handrail.

Exceptions:

1. Handrails shall be permitted to be interrupted by a newel post at a turn.
2. The use of a volute, turnout or starting easing shall be allowed over the lowest tread.

Handrail Grip Size: The handgrip portion of handrails shall have a circular cross section of 1-1/4" minimum to 2" maximum. Other handrail shapes that provide an equivalent grasping surface are permissible. Edges shall have a minimum radius of 1/8".

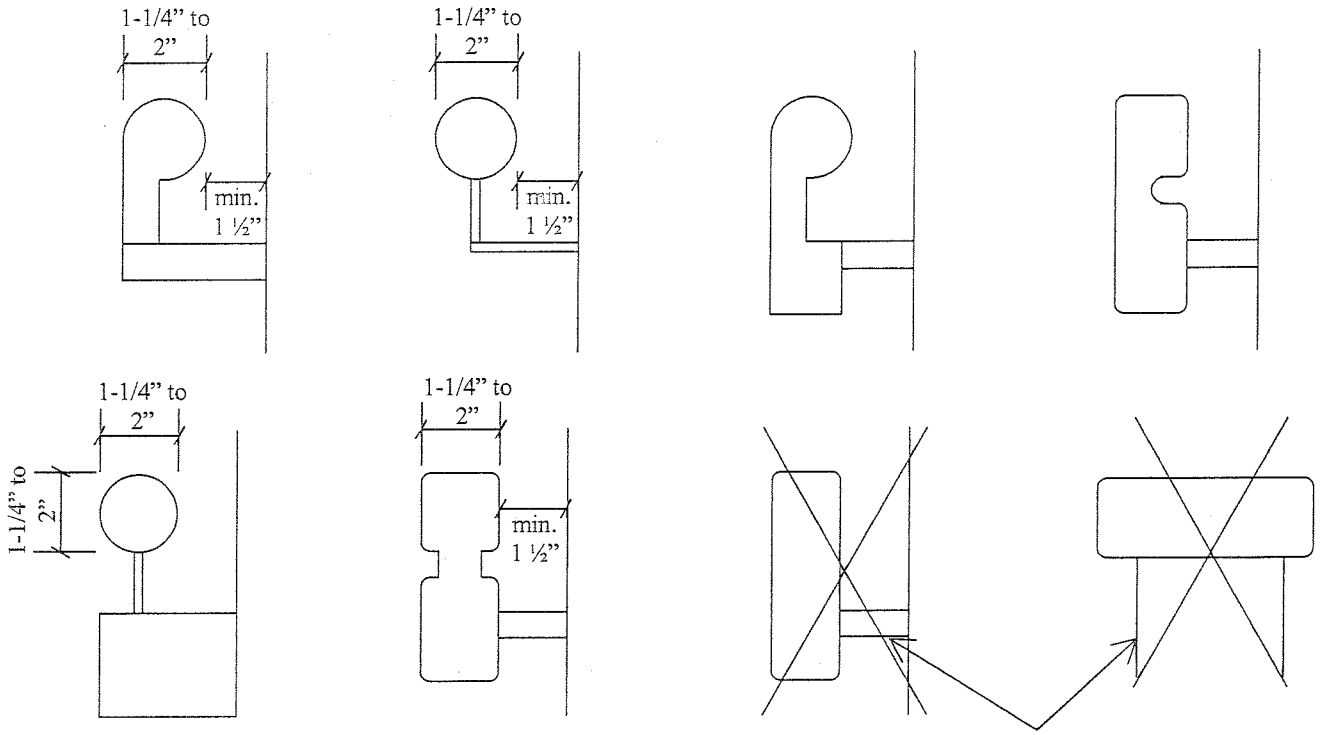

(Sample Handrails) NOT ACCEPTABLE

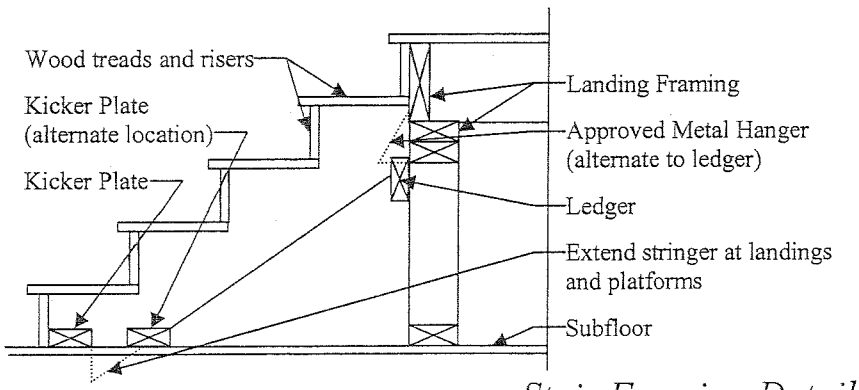

Stair Framing Detail

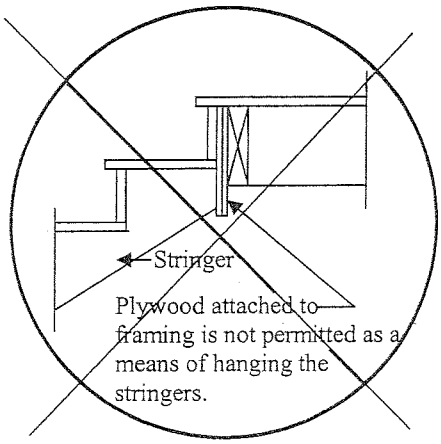

DEPARTMENT OF SAFETY AND INSPECTIONS
Bob Kessler, Director

CITY OF SAINT PAUL
Christopher B. Coleman, Mayor

675 Jackson Street, Suite 220
St Paul, Minnesota 55101-1806

Telephone: 651-266-9090
Facsimile: 651-266-9124
Web: www.stpaul.gov/dsi

1. A homeowner permit may be issued to an owner/occupant of a single family dwelling.

2. Building and general construction permits are required for any structural work or when repairs exceed the present market value of $500.00 material and labor.

3. All plumbing, electrical and mechanical work requires a permit unless otherwise noted.

4. All work must be done by permit holder (responsible party).

5. An inspection by plumbing and/or electrical inspectors must be performed on all piping or wiring before it is concealed by walls, ceilings, floors, dirt or concrete.

6. Plumbing installations may require air test which must be performed by a licensed plumber.

7. Final air test for plumbing, and approval after fixtures have been installed, must be received by this department before fixtures are used.

8. All extra inspections, because of incorrect installation, will cost $70.00 per inspection.

9. It is the permit holder's responsibility to notify the inspector between 7:30 a.m. and 9:00 a.m. when they are ready for an inspection.

10. On vacant buildings, plumbing permits can only be issued to and work performed by a licensed, Saint Paul Plumbing Contractor. Work cannot be done by future homeowner/occupant.

11. On vacant buildings, electrical permits will be issued to future homeowner/occupant only on the unit they are going to occupy.

12. For inquires about orders or requests for alternative methods of compliance, call Jim Seeger at 651-266-9046, between 7:30 a.m. and 9:00 a.m. If you consider these code requirements to be unreasonable, you may appeal to the Legislative Hearing Officer. An application for an appeal may be obtained at the City Clerks Office, 15 West Kellogg Blvd., Room 310 City Hall 651-266-8688, within ten (10) days of the date of the original orders.

Revised 10/17/2008

NOTICE

LEAD BASED PAINT HAZARD

If your property was built before 1978, it may contain LEAD PAINT HAZARDS. It is important to take precautions when removing lead paint. (Removing lead paint creates hazardous dust which may cause lead poisoning, a particular danger to children). You can test your paint for lead either at the Saint Paul Public Health Department or at a number of private labs. For Information on proper paint removal call the Ramsey County Health Department at 651-266-1138.

NOTICE

SAINT PAUL LEGISLATIVE CODE, CHAPTER 35, requires that the Name, Address, City, State and Zip Code of the owner or an agent responsible for this property be posted in a conspicuous place at or near the front entrance of the building. This Notice should be readable from the outside of the building.

A TELEPHONE NUMBER for 24-hour service shall be available to the tenants of this building.

This is for rental housing only. Owner-occupied property is exempt form these requirements.

PLEASE READ BEFORE CALLING

FIRE CERTIFICATE OF OCCUPANCY PROGRAM
For one and two family houses used as rental property or not occupied by the owner

WHEN YOU RECEIVE THE **CODE COMPLIANCE CERTIFICATE** **AND WANT TO REGISTER THE PROPERTY WITH FIRE CERTIFICATE OF OCCUPANCY, FILL OUT THE ENCLOSED APPLICATION AND RETURN IT TO THE ADDRESS LISTED. PLEASE INCLUDE A COPY OF THE CODE COMPLIANCE CERTIFICATE.**

The City of Saint Paul requires a **Fire Certificate of Occupancy for** all one and two family houses* used as rental property or not occupied by the listed owner.

IF YOU REGISTER THE PROPERTY WITHIN 30 DAYS, THE FIRE CERTIFICATE OF OCCUPANCY PROVISIONAL FEE IS WAIVED.
IF YOU WERE SENT A FIRE BILL, THAT FEE MAY STILL BE OWED.
YOU DO NOT HAVE TO COME IN.

Additional information regarding the **Fire Certificate of Occupancy** program and the new classification process can be found on the City of Saint Paul website by going to www.stpaul.gov\dsi.

**One and two family dwellings not occupied by the owner which also include up to four additional rooming units are required to be registered under this ordinance.*