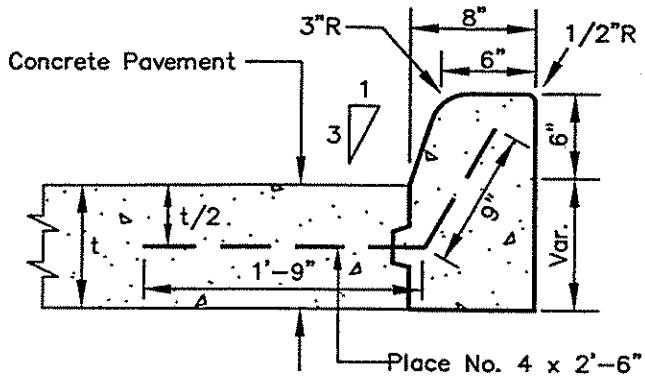

TYPE 1

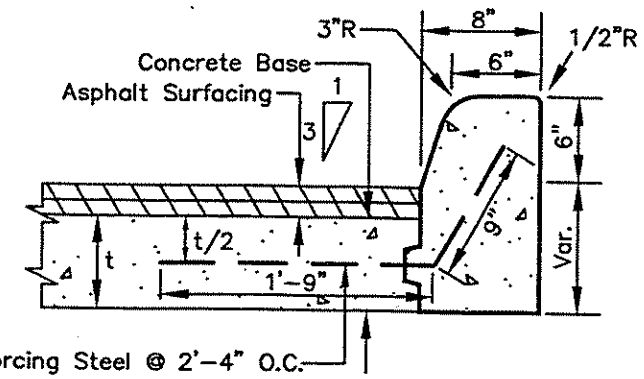

TYPE 2

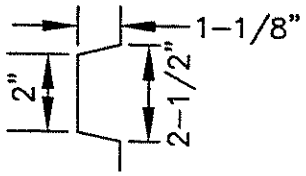

KEYWAY DETAIL

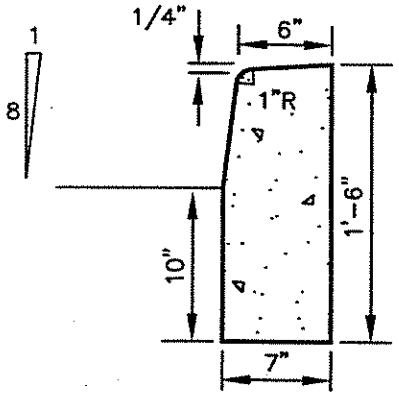

TYPE 3

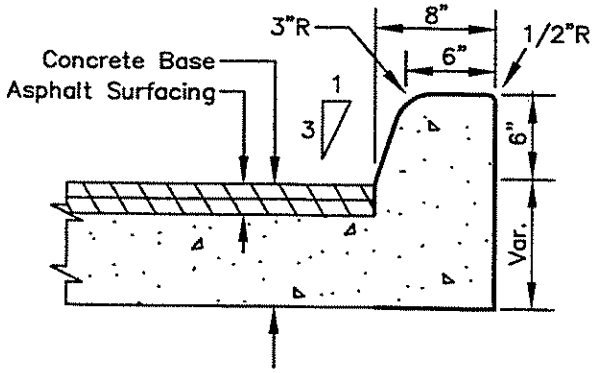

TYPE 4

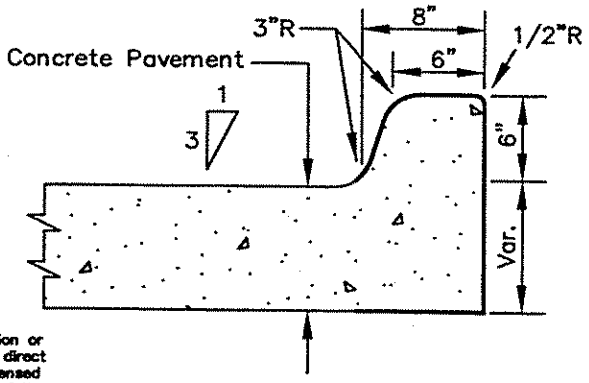

TYPE 5

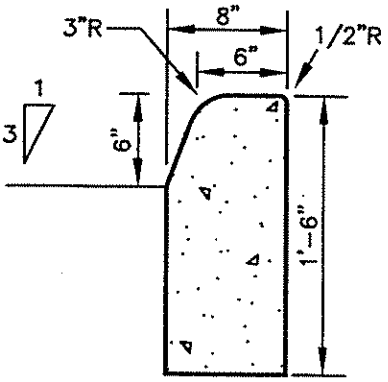

TYPE 6

NOTE: Joints through curb shall coincide with the joints in the pavement.

I hereby certify that this plan, specification or report was prepared by me or under my direct supervision and that I am a duly Licensed Professional Engineer under the laws of the State of Minnesota.

Daniel A. Haak

DANIEL A. HAAK

Date 8/30/02 Lic. No. 17274

APPROVED CITY ENGINEER	CITY OF ST. PAUL DEPARTMENT OF PUBLIC WORKS CONCRETE CURB	Date of Revision JULY 2002	Standard Plate No. 3000B