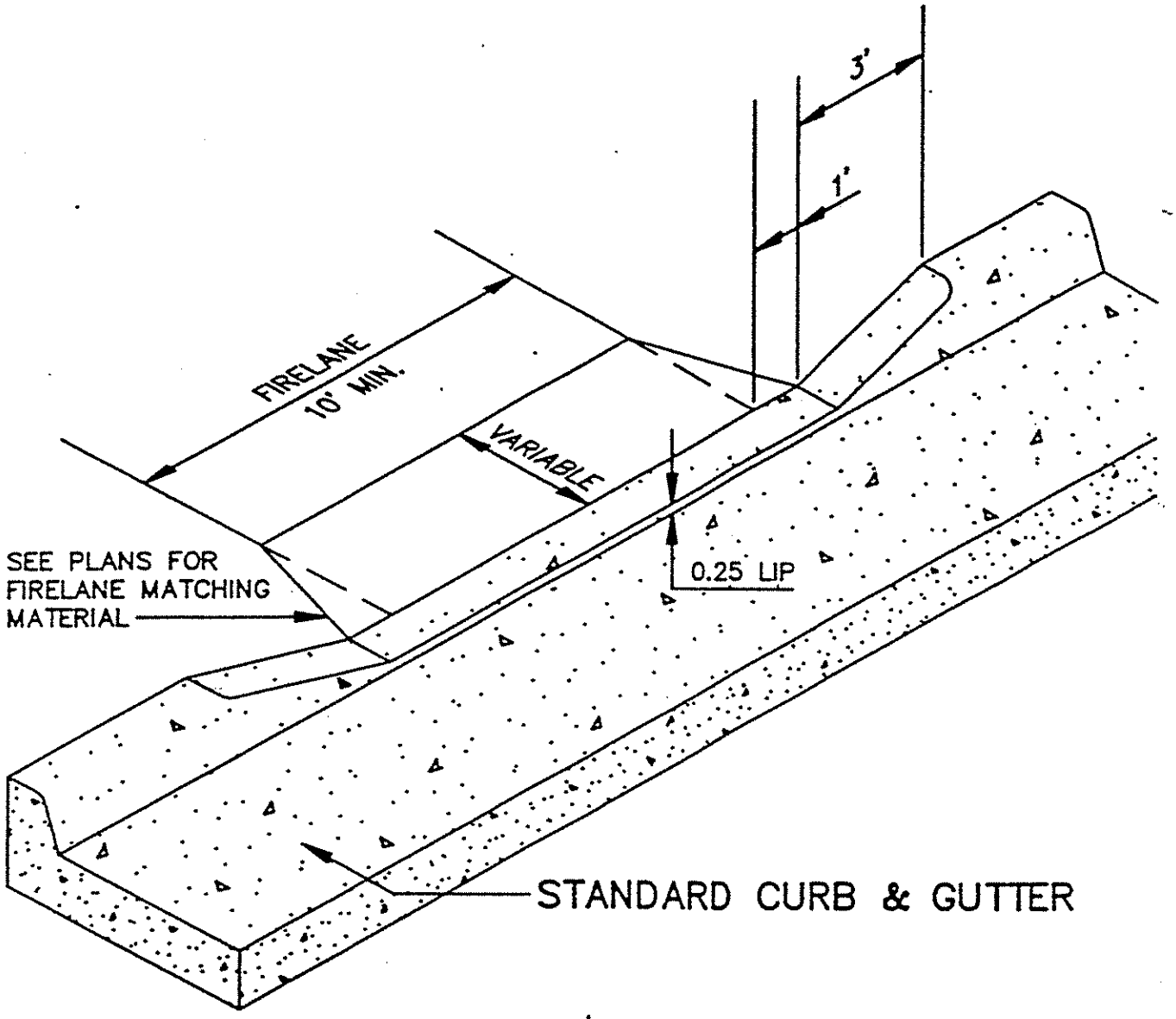

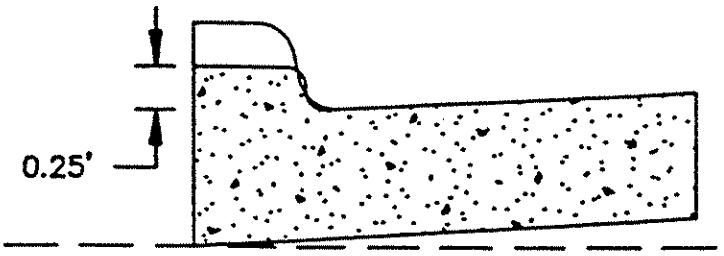

DETAIL OF LIP

I hereby certify that this plan, specification or report was prepared by me or under my direct supervision and that I am a duly Registered Professional Engineer under the laws of the State of Minnesota.

Paul A. St. Martin

Date 9-2-88 Reg. No. 18955

APPROVED 9-12-88 P.W. DIRECTOR	CITY OF ST. PAUL DEPARTMENT OF PUBLIC WORKS CONC. CURB & GUTTER OPENING FOR FIRELANE	Date of Revision AUGUST 1988	Standard Plate No. 3104A