THE TOP 12 INCHES OF THE 1" X 40" ANCHOR BOLTS SHALL BE HOT DIP GALVANIZED. ANCHOR BOLTS SHALL BE THREADED A MINIMUM OF SIX INCHES WITH UNC 8 THREAD. TWO, ONE INCH UNC 8 GALVANIZED HEX NUTS MEASURING 1-5/8" ACROSS THE FLATS, AND TWO GALVANIZED PLATED HOT DIPPED STEEL FLAT WASHERS (MINIMUM 2-1/2" OUTER DIAMETER AND 3/16" THICK) SHALL BE PROVIDED FOR EACH ANCHOR BOLT.

TOP VIEW

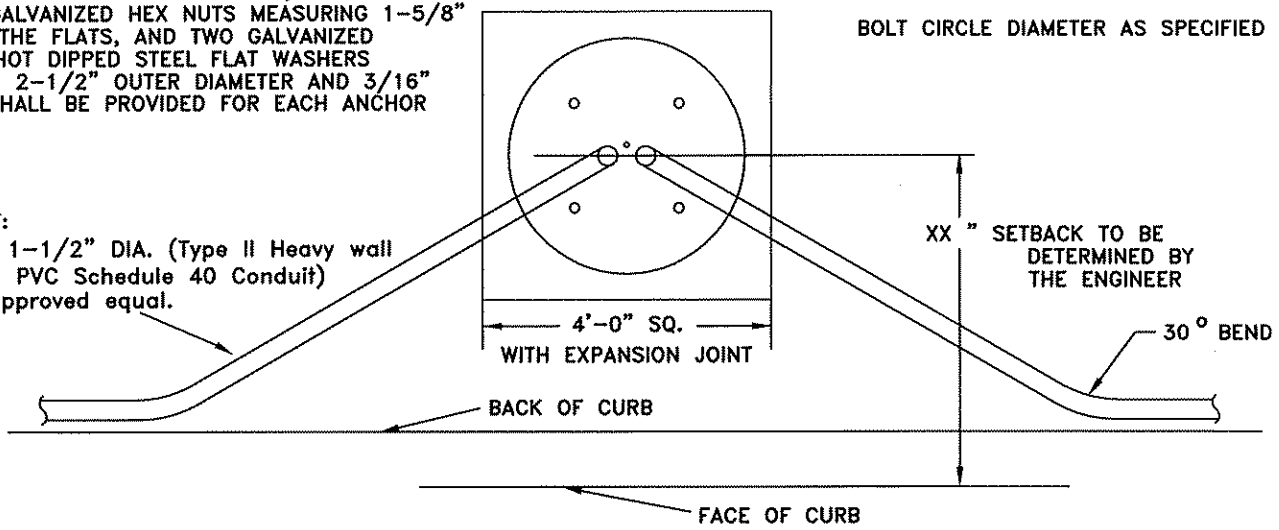

SIDE VIEW

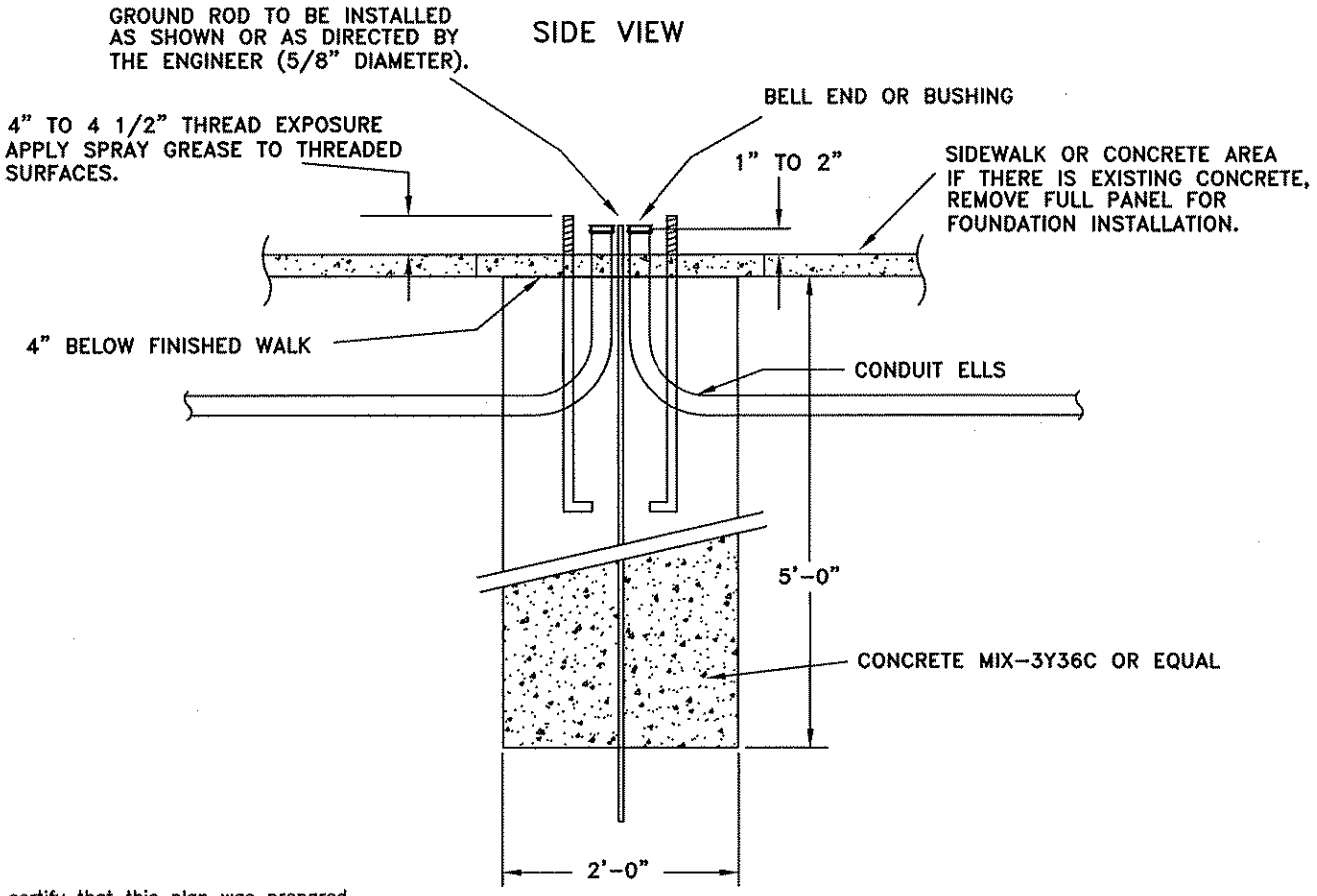

I hereby certify that this plan was prepared by me or under my direct supervision and that I am a duly Registered Professional Engineer under the laws of the State of Minnesota.

Brian P. Vitek

Date 6/2/2008 Reg. No. 40444

APPROVED 6-2-2008 CITY ENGINEER	CITY OF SAINT PAUL DEPARTMENT OF PUBLIC WORKS LIGHT STANDARD FOOTING DETAIL CONCRETE SURFACE	Date of Revision MAY 2008	Standard Plate No. 5009B