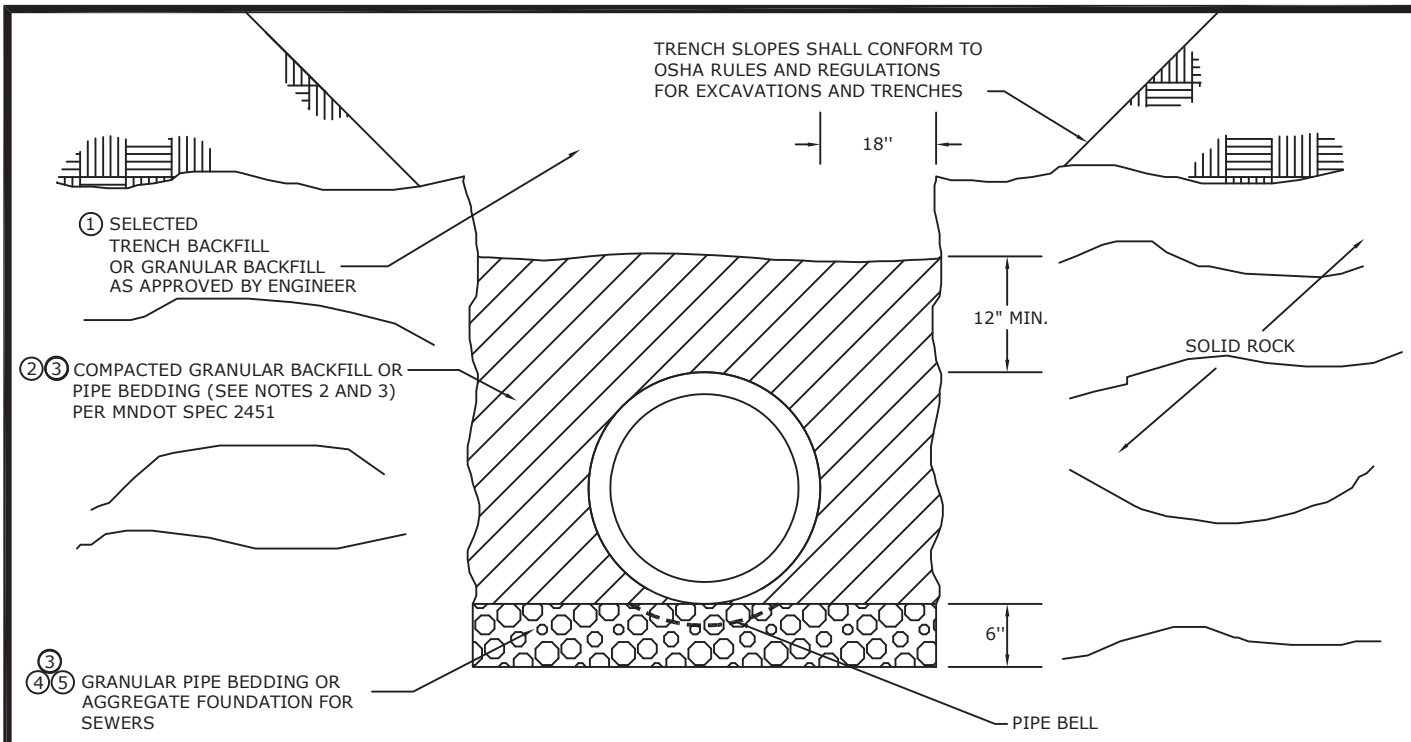

BEDDING IN ROCK

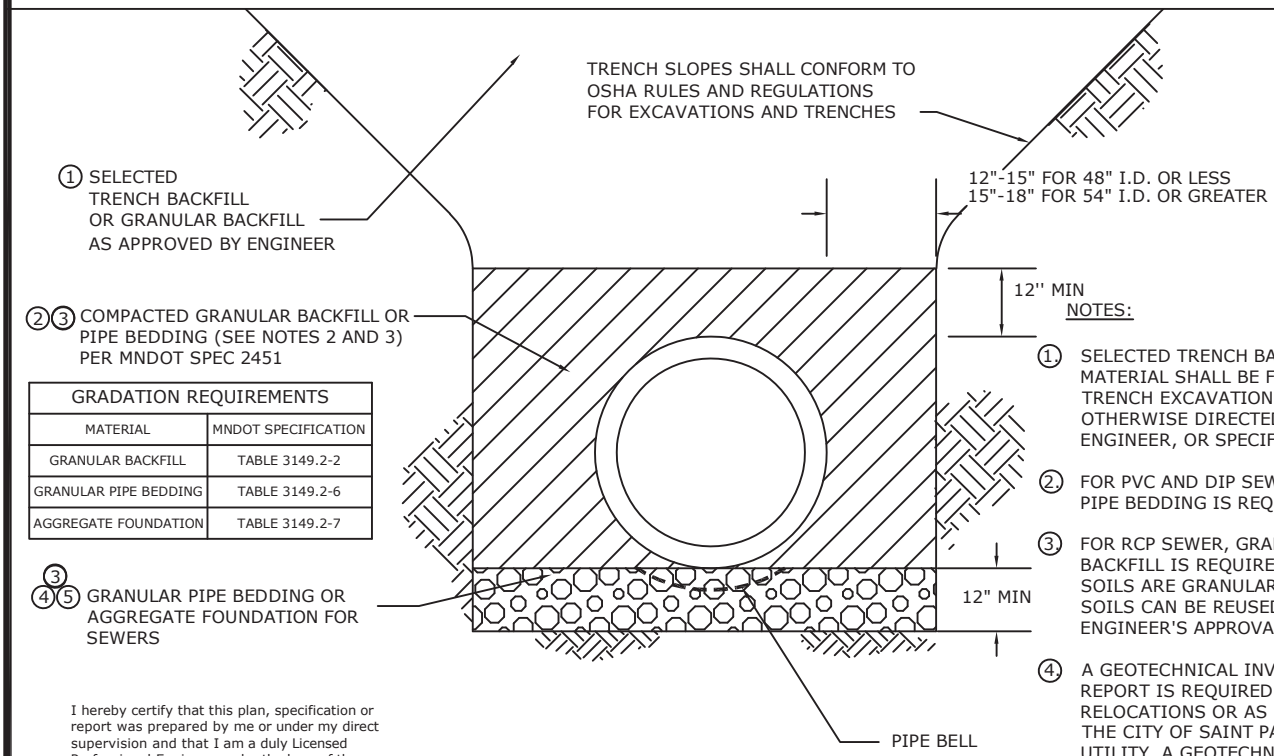

GRADATION REQUIREMENTS	
MATERIAL	MNDOT SPECIFICATION
GRANULAR BACKFILL	TABLE 3149.2-2
GRANULAR PIPE BEDDING	TABLE 3149.2-6
AGGREGATE FOUNDATION	TABLE 3149.2-7

TYPICAL BEDDING

NOTES:

1. SELECTED TRENCH BACKFILL MATERIAL SHALL BE FROM PROJECT TRENCH EXCAVATION UNLESS OTHERWISE DIRECTED BY THE ENGINEER, OR SPECIFIED.
2. FOR PVC AND DIP SEWER, GRANULAR PIPE BEDDING IS REQUIRED.
3. FOR RCP SEWER, GRANULAR BACKFILL IS REQUIRED. IF EXISTING SOILS ARE GRANULAR, EXISTING SOILS CAN BE REUSED WITH ENGINEER'S APPROVAL.
4. A GEOTECHNICAL INVESTIGATION REPORT IS REQUIRED FOR SEWER RELOCATIONS OR AS REQUIRED BY THE CITY OF SAINT PAUL SEWER UTILITY. A GEOTECHNICAL INVESTIGATION REPORT, SIGNED BY A PROFESSIONAL ENGINEER, SUPERCEDES THIS DETAIL.
5. AGGREGATE FOUNDATION, IF USED, IS TO BE WRAPPED IN (2) LAYERS OF MNDOT TYPE V GEOTEXTILE FABRIC.

I hereby certify that this plan, specification or report was prepared by me or under my direct supervision and that I am a duly Licensed Professional Engineer under the laws of the State of Minnesota

Aaron D. Hass

AARON D. HASS

Date 5/8/2023 Lic. No. 26424

APPROVED 5/8/2023	CITY OF ST. PAUL DEPARTMENT OF PUBLIC WORKS	Date of Revision	Standard Plate No.
CITY ENGINEER	CLASS 'D' PIPE BEDDING	MAY 2023	2317E