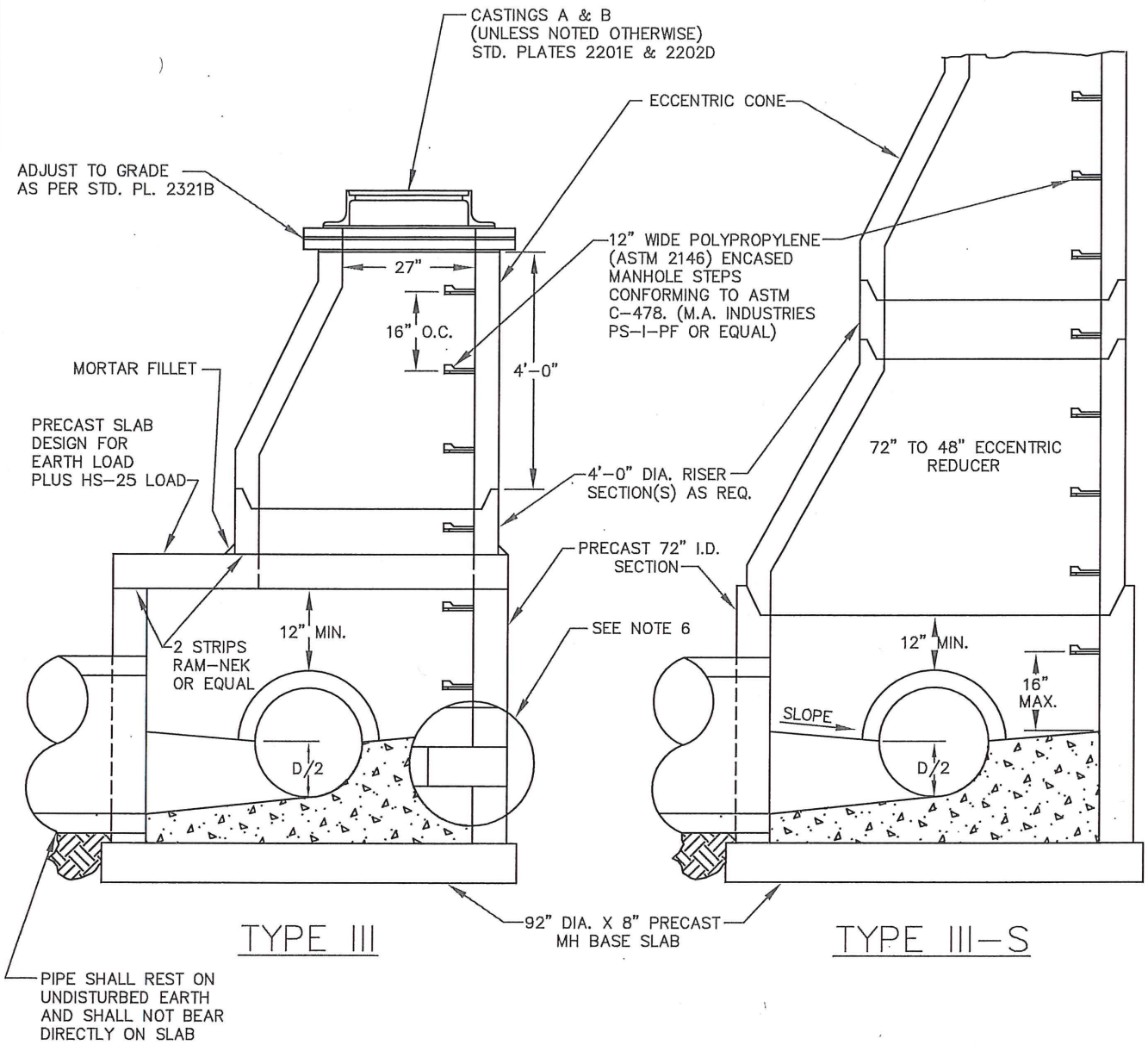

NOTES:

1. FOR CONSTRUCTION OF STORM SEWERS 36" I.D. OR LESS AT DIRECTION CHANGES OR OFFSET WHERE DEPTH TO INVERT EXCEEDS 9'
2. PRECAST RISER SECTIONS TO MEET ASTM C-487
3. JOINTS BETWEEN PRECAST SECTIONS SHALL USE O-RING RUBBER GASKET CONFORMING TO ASTM C-443 EXCEPT AS NOTED.
4. POURED CONCRETE INVERT SHALL BE CONCRETE MIX 3G52
5. FILL SPACE BETWEEN PRECAST KNOCK-OUT AND PIPE WALL WITH MORTAR AND CONCRETE MASONRY.
6. THIS PORTION OF MANHOLE MAY BE CONSTRUCTED OF 8" SOLID CONCRETE MANHOLE BLOCK (SEE SPECIFICATIONS).
   ALL JOINTS SHALL BE COMPLETELY FILLED WITH MORTAR 3/8" THICK.
7. SAW CUT PIPES FLUSH WITH INSIDE WALL OF MANHOLE.

I hereby certify that this plan, specification or report was prepared by me or under my direct supervision and that I am a duly Licensed Professional Engineer under the laws of the State of Minnesota

Aaron D. Hass

AARON D. HASS

Date 01-24-2017 Lic. No. 26424

APPROVED 2-2-2017 Paul T. Kurtz CITY ENGINEER	CITY OF ST. PAUL DEPARTMENT OF PUBLIC WORKS MANHOLE, TYPE III & III-S	Date of Revision JAN 2017	Standard Plate No. 2103F