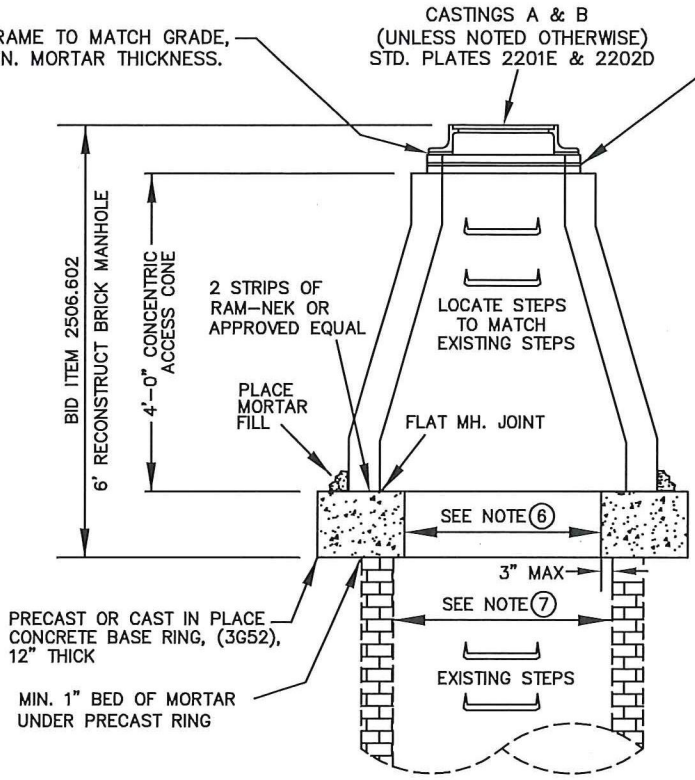

NOTES:

1. REMOVE EXISTING CASTING, ADJUSTING RINGS AND BRICK RISER TO A DEPTH OF 6' OR AS INDICATED IN THE PLANS OR AS DIRECTED BY THE ENGINEER.
2. PRECAST RISER SECTION TO MEET ASTM C-478
3. JOINTS BETWEEN PRECAST SECTIONS SHALL USE O-RING RUBBER GASKET CONFORMING TO ASTM C-443
4. PROTECT REMAINING BRICK PORTION OF MANHOLE DURING CONSTRUCTION.
5. MANHOLE INVERT SHALL REMAIN FREE OF CONSTRUCTION DEBRIS.
6. PROVIDE 72"X42" DIAMETER CONCRETE BASE RING FOR 48" DIAMETER BRICK MANHOLE. THIS MAY NEED TO VARY IF BRICK MANHOLE DIAMETER IS SMALLER OR LARGER
7. CONTRACTOR TO FIELD VERIFY BRICK MANHOLE DIA. PRIOR TO BEGINNING WORK

RECONSTRUCT BRICK MANHOLE – 6' DEPTH

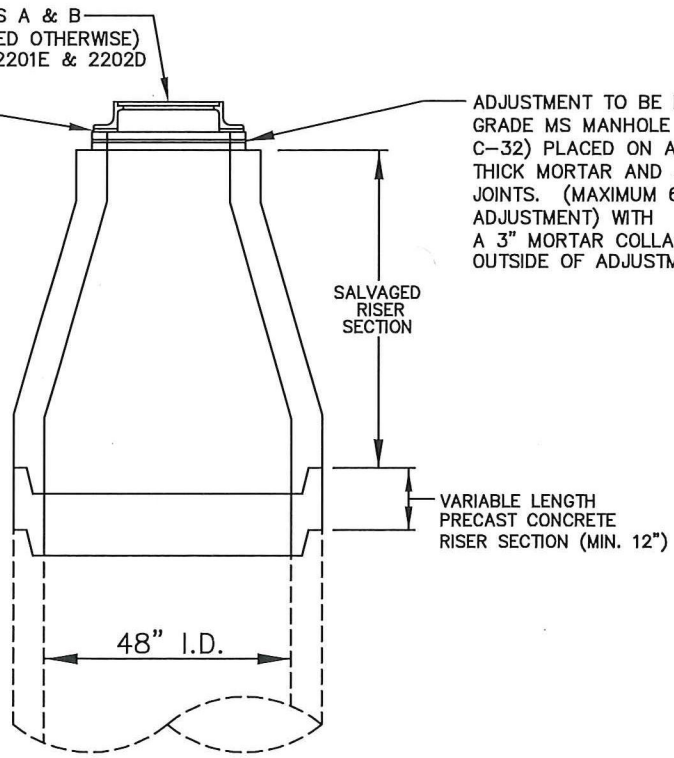

NOTES:

1. REMOVE EXISTING CASTING, ADJUSTING RINGS AND BRICK RISER TO A LENGTH INDICATED IN THE PLANS OR AS DIRECTED BY THE ENGINEER.
2. PRECAST RISER SECTION TO MEET ASTM C-478
3. JOINTS BETWEEN PRECAST SECTIONS SHALL USE O-RING RUBBER GASKET CONFORMING TO ASTM C-443

I hereby certify that this plan, specification or report was prepared by me or under my direct supervision and that I am a duly Licensed Professional Engineer under the laws of the State of Minnesota

Aaron Hass

AARON D. HASS

Date 11-3-2016 Lic. No. 26424

PRECAST CONCRETE MANHOLE RECONSTRUCTION (OR MANHOLE ADJUSTMENT OF 18" OR GREATER)

APPROVED 11-03-2016 Paul M. Kurtz CITY ENGINEER	CITY OF ST. PAUL DEPARTMENT OF PUBLIC WORKS MANHOLE, RECONSTRUCT	Date of Revision OCT 2016	Standard Plate No. 2322D