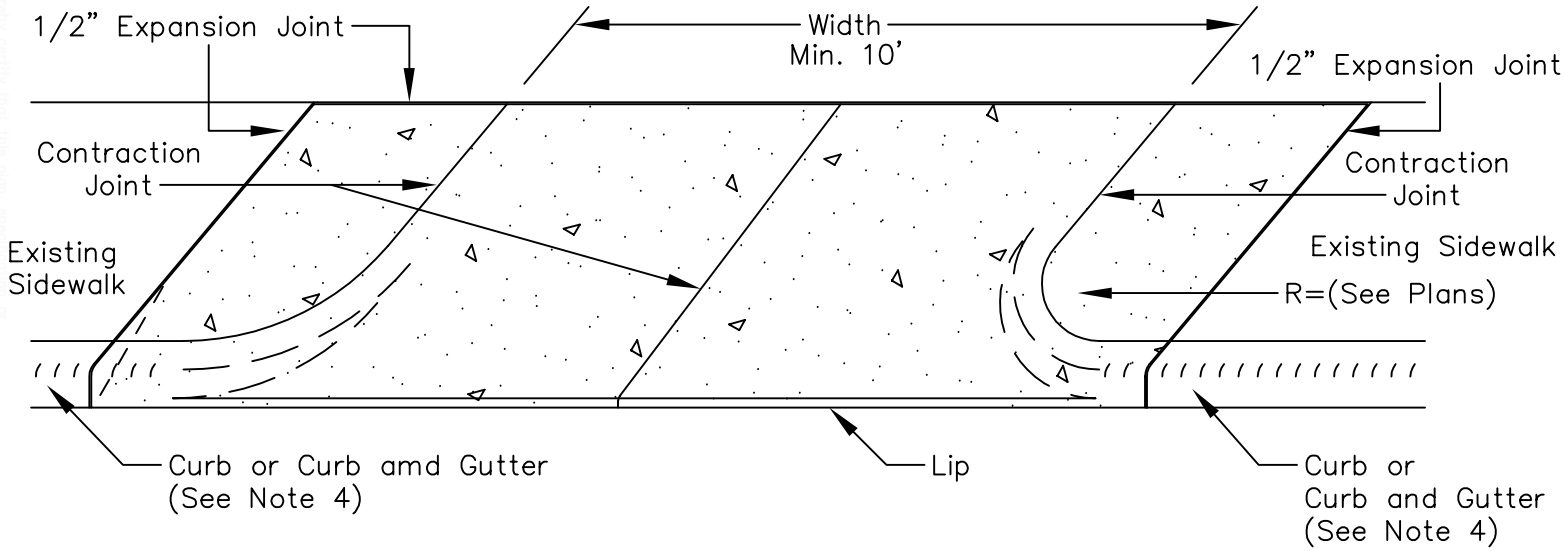

PLAN

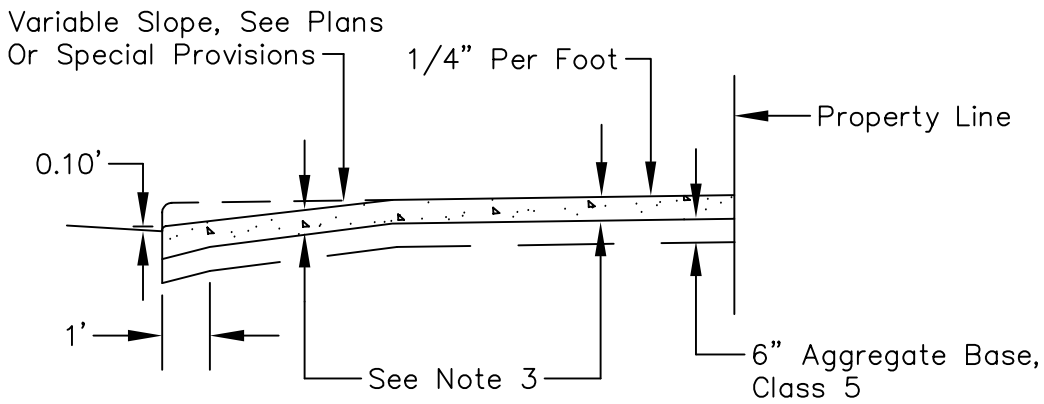

SECTION ON ℄ DRIVEWAY

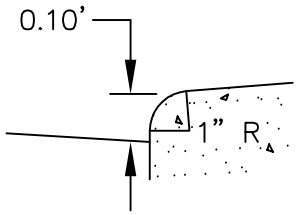

DETAIL OF LIP

1. Panel Width Shall Not Exceed 10' Without A Contraction Joint.
2. Driveway to be One Course Concrete Pavement (See Special Provisions for Class of Concrete).
3. 6" Thick for Residential, 8" Thick for Commercial Drive and Alleys.
4. Gutter To Be Paved Integral With Driveway Pavement, Where Curb And Gutter Is Used.

I hereby certify that this plan, specification, or report was prepared by me or under my direct supervision and that I am a duly Licensed Professional Engineer under the laws of the State of Minnesota

DANIEL A. MARK

Date _____ Lic. No. _____

APPROVED _____

CITY ENGINEER

CITY OF ST. PAUL
DEPARTMENT OF PUBLIC WORKS
CONCRETE DRIVEWAY
TYPE 5

Date of Revision
JULY 2002

Standard Plate No.
12040