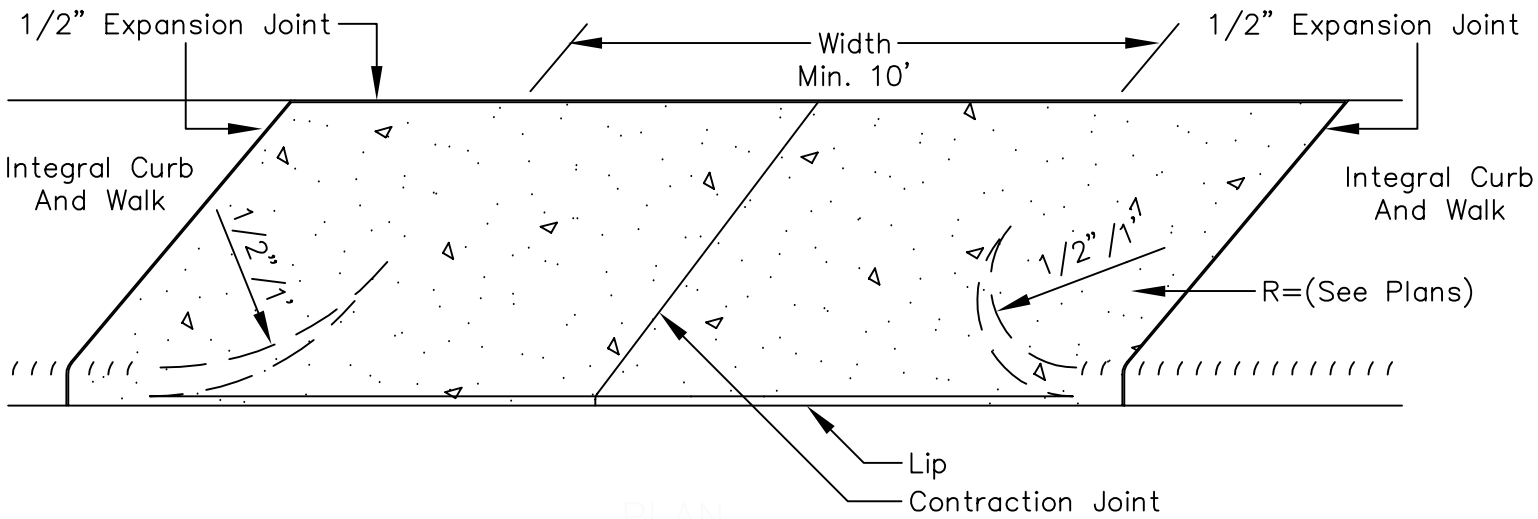


PLAN

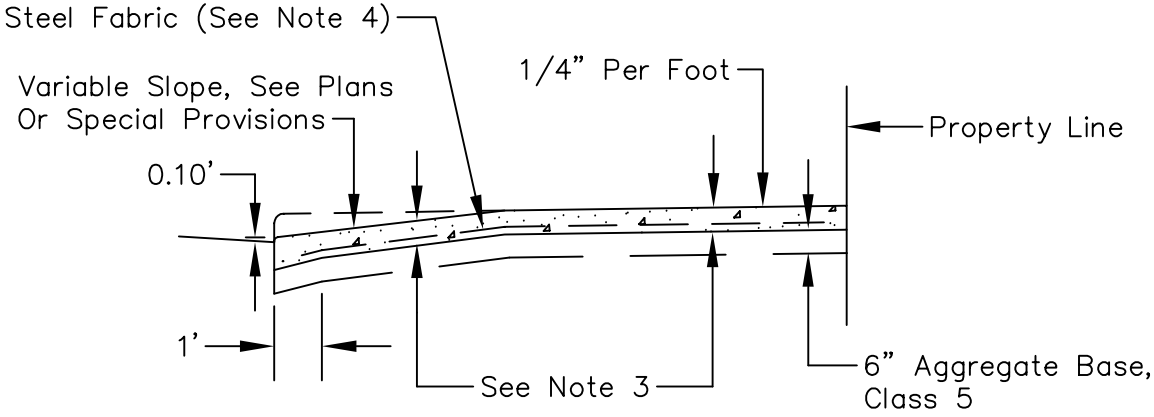


SECTION ON ℄ DRIVEWAY

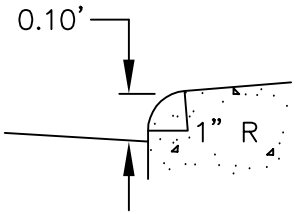


DETAIL OF LIP

1. Panel Width Shall Not Exceed 10' Without A Centerline Contraction Joint.
2. Driveway To Be One Course Concrete Pavement (See Special Provisions For Class Of Concrete).
3. 6" Thick For Residential, 8" Thick For Commercial Drive And Alleys.
4. Steel Fabric Shall Be 6"x 6"–8/8 And In The Range Of: 1–1/2" Above The Bottom And Mid–Depth Of The Slab.

APPROVED
CITY ENGINEER

I hereby certify that this plan, specification, or report was prepared by me or under my direct supervision and that I am a duly Licensed Professional Engineer under the laws of the State of Minnesota

DANIEL A. MARK
Date _____ Lic. No. _____

CITY OF ST. PAUL
DEPARTMENT OF PUBLIC WORKS
CONCRETE DRIVEWAY
REINFORCED & NON-REINFORCED

Date of Revision
JULY 2002

Standard Plate No.
12050