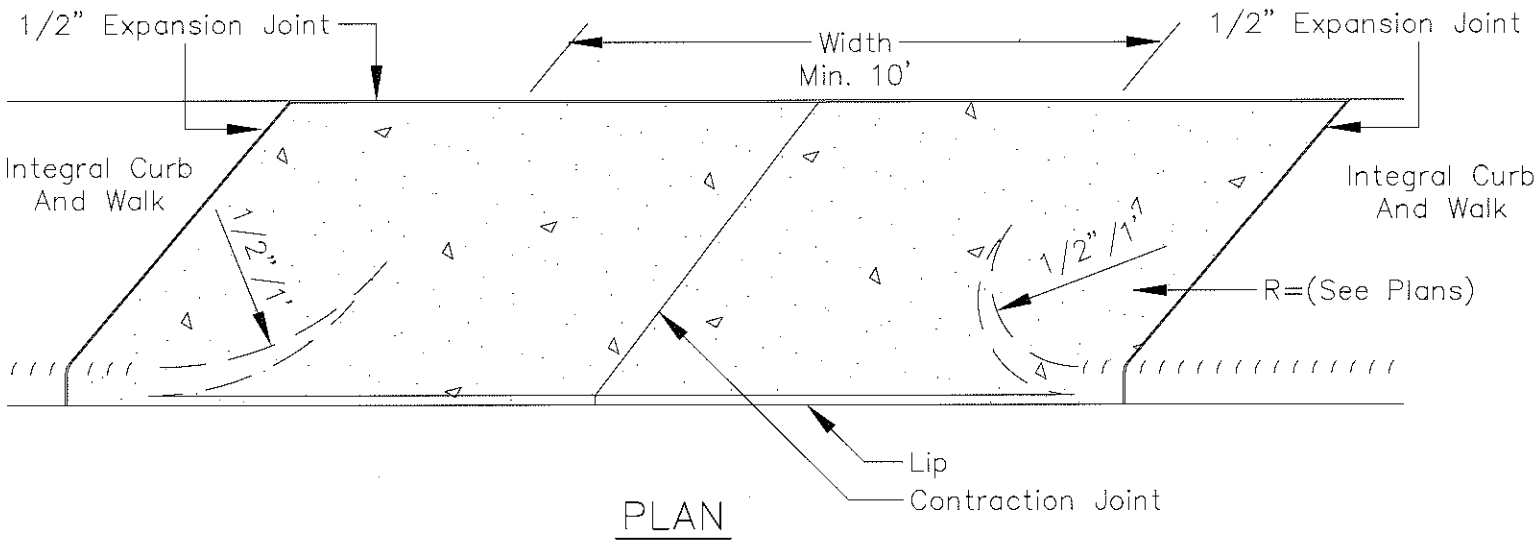

PLAN

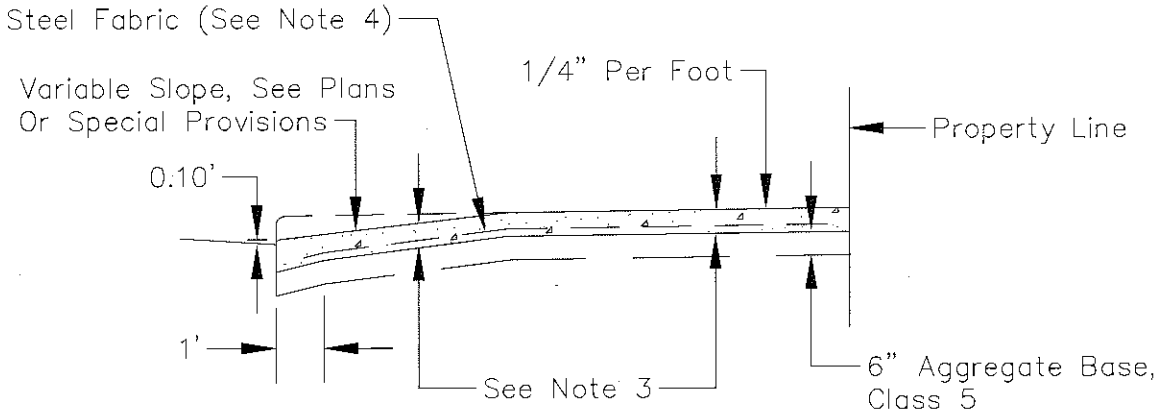

SECTION ON ℄ DRIVEWAY

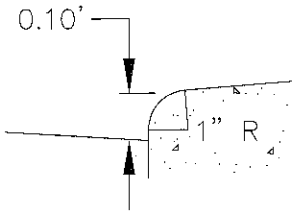

DETAIL OF LIP

1. Panel Width Shall Not Exceed 10' Without A Centerline Contraction Joint.
2. Driveway To Be One Course Concrete Pavement, Mix No. 3F52.
3. 6" Thick For Residential, 8" Thick For Commercial Drive And Alleys.
4. Steel Fabric Shall Be 6"x 6"-8/8 And In The Range Of: 1-1/2" Above The Bottom And Mid-Depth Of The Slab.

I hereby certify that this plan, specification or report was prepared by me or under my direct supervision and that I am a duly Licensed Professional Engineer under the laws of the State of Minnesota

DANIEL A. HAAK

Date 11/25/15 Lic. No. 17274

APPROVED

CITY ENGINEER

CITY OF ST. PAUL
DEPARTMENT OF PUBLIC WORKS

CONCRETE DRIVEWAY

REINFORCED & NON-REINFORCED

Date of Revision
NOV 2015

Standard Plate No.
1205D