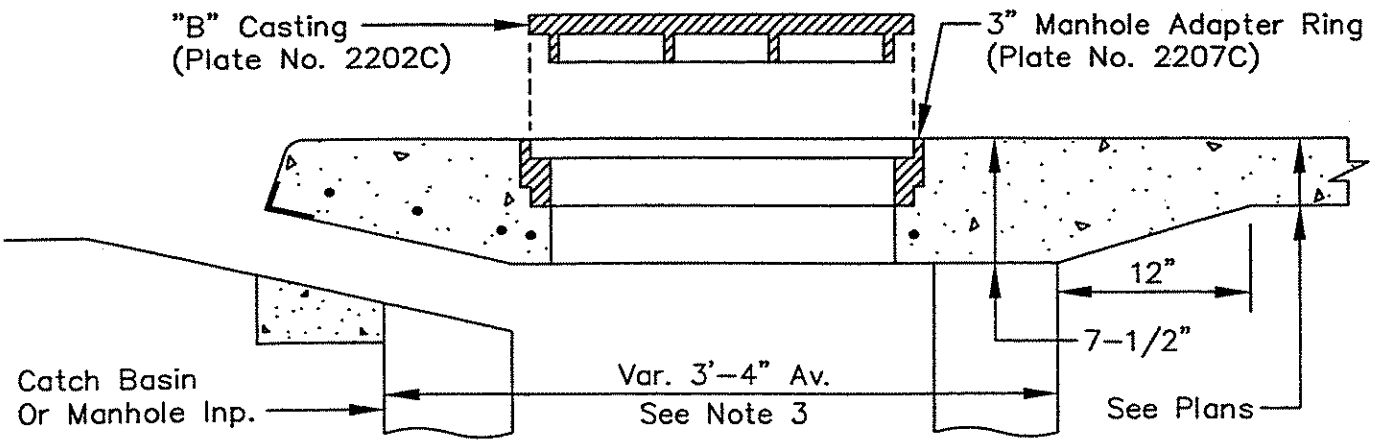

SIDE ELEVATION

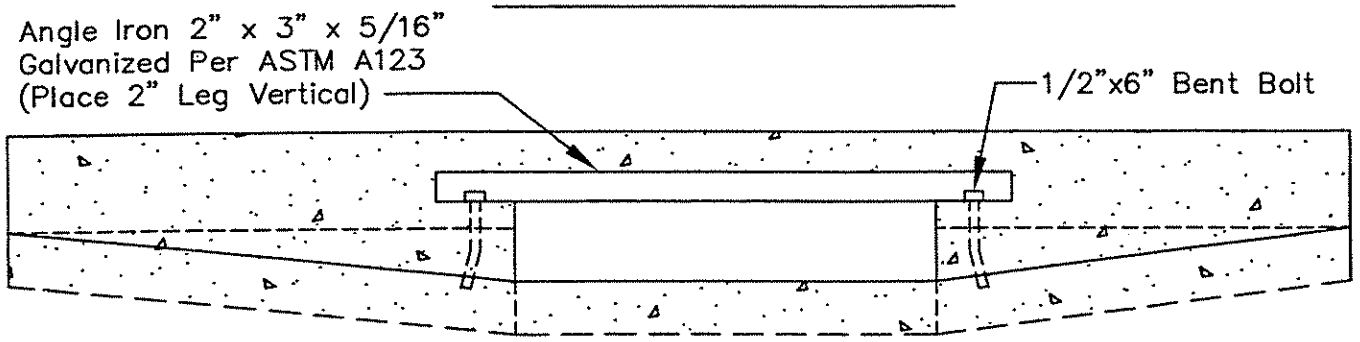

FRONT ELEVATION

NOTE:

1. 2" Clearance From Bottom Of Concrete To Reinforcing.
2. Do Not Carry Reinforcing Beyond Edge Of Structure.
3. Limit Of This Work For Payment Purpose Is Outside Edge Of Structure.
4. Existing "J" Cover Castings Shall Not Be Reused.
5. All Form Work And Construction Materials Due To Contractor's Operation Shall Be Removed From Catch Basin Or Manhole.
6. Reinforcing Steel To Be Grade 60 Fusion Bonded Epoxy Coated Per ASTM A775.

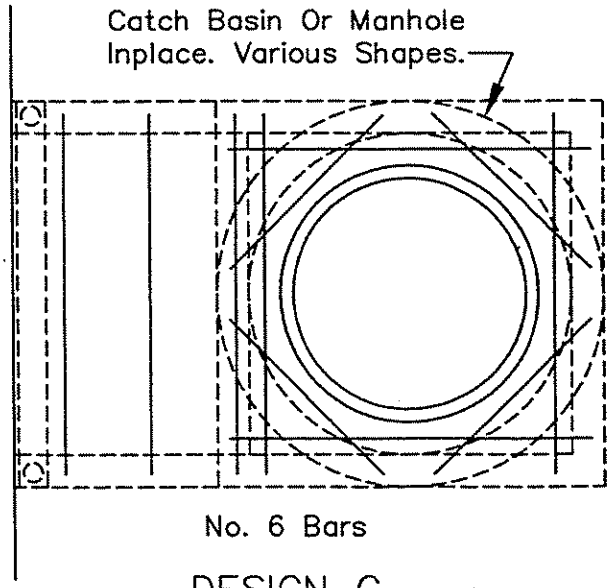

DESIGN C

REINFORCING DETAIL

I hereby certify that this plan, specification or report was prepared by me or under my direct supervision and that I am a duly Licensed Professional Engineer under the laws of the State of Minnesota.

Daniel A. Haak

DANIEL A. HAAK

Date 8/30/02 Lic. No. 17274

APPROVED CITY ENGINEER	CITY OF ST. PAUL DEPARTMENT OF PUBLIC WORKS MANHOLE OPENING IN CONC. SIDEWALK DESIGN C	Date of Revision JULY 2002	Standard Plate No. 1303C