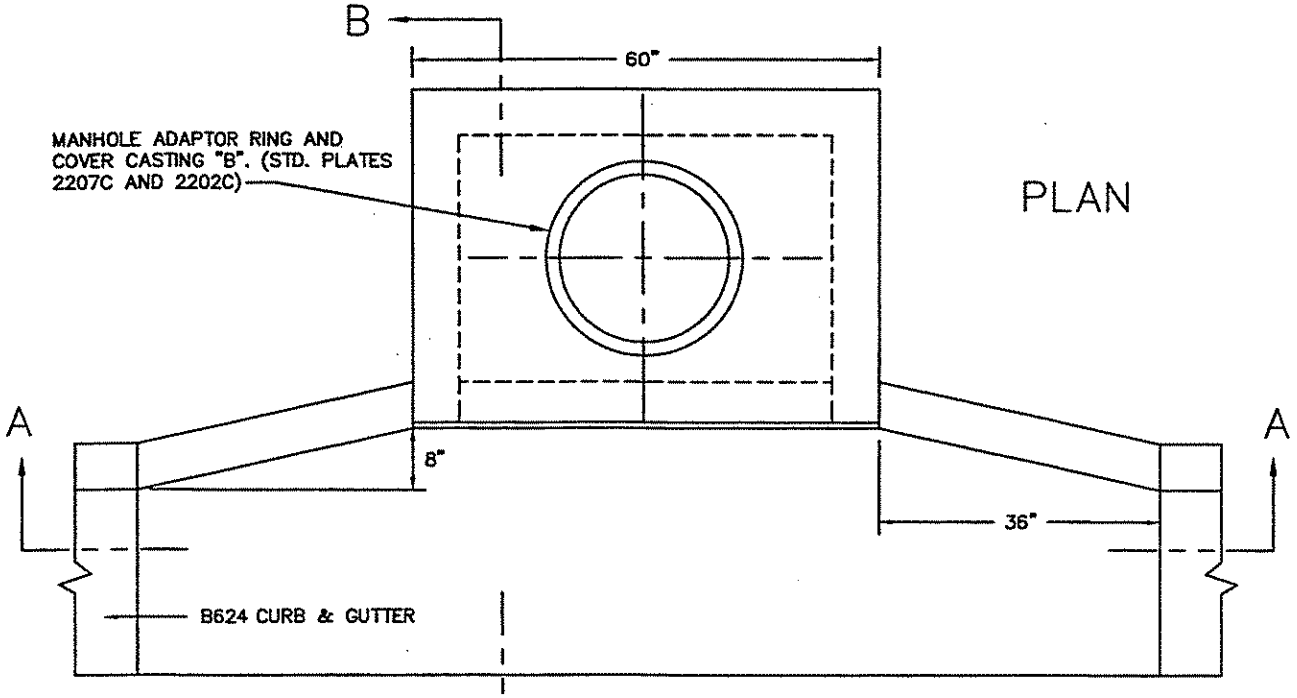

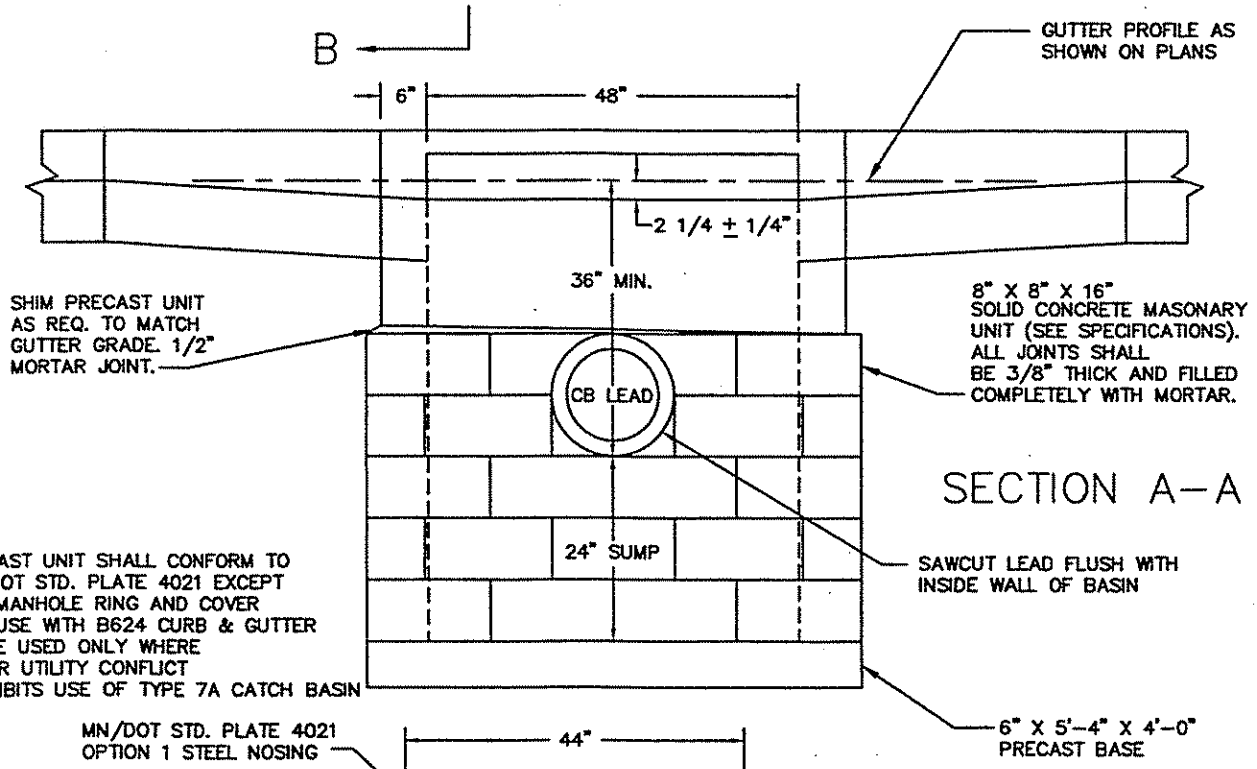

NOTES:

1. PRECAST UNIT SHALL CONFORM TO MN/DOT STD. PLATE 4021 EXCEPT FOR MANHOLE RING AND COVER
2. FOR USE WITH B624 CURB & GUTTER
3. TO BE USED ONLY WHERE MAJOR UTILITY CONFLICT PROHIBITS USE OF TYPE 7A CATCH BASIN

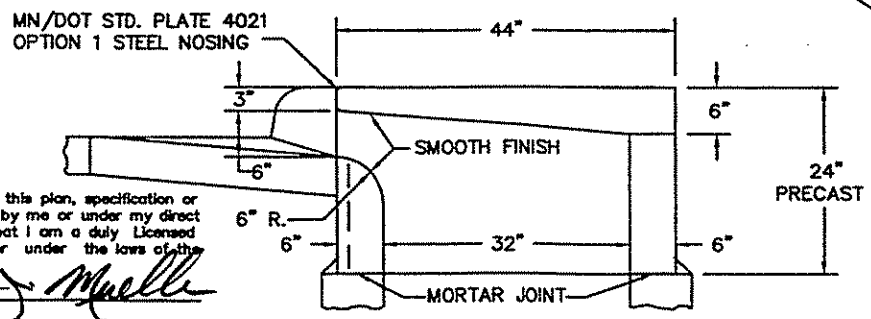

I hereby certify that this plan, specification or report was prepared by me or under my direct supervision and that I am a duly Licensed Professional Engineer under the laws of the State of Minnesota

Joseph J. Mueller

JOSEPH J MUELLER

Date 9-2-02 Lic. No. 13942

APPROVED	CITY OF ST. PAUL DEPARTMENT OF PUBLIC WORKS	Date of Revision	Standard Plate No.
CITY ENGINEER	CATCH BASIN, TYPE 2A	JULY 2002	2003D