NOTES:

1. TAPER & FLOW LINE DEPRESSION SHOWN APPLY TO B-624 CURB. NO TAPER IS REQUIRED WHEN USED WITH INTEGRAL CURB & WALK (STD PLATE 1300D)
2. FRAME CASTING SHALL MATCH INSIDE OPENING OF BASIN. NO OFFSET WILL BE ALLOWED.
3. FRAME, GRATE AND CURB BOX AS PER STD. PL. 2211 OR AS NOTED IN THE PLANS.
4. AT THE CONTRACTORS OPTION, THE BOTTOM SLAB AND/OR SUMP MAY ALSO BE CAST IN PLACE CONCRETE.
5. ALL CAST IN PLACE CONCRETE SHALL BE MN/DOT MIX 3Y43 WITH 15% TYPE C FLYASH SUBSTITUTED FOR CEMENT AS PER MN/DOT 2461 AND SHALL BE RODDED IN PLACE OR MECHANICALLY VIBRATED TO ASSURE DENSITY AND ELIMINATE HONEYCOMBING.
6. SEE STANDARD PLATE 3108 FOR USE WITH MOUNTABLE CURB.

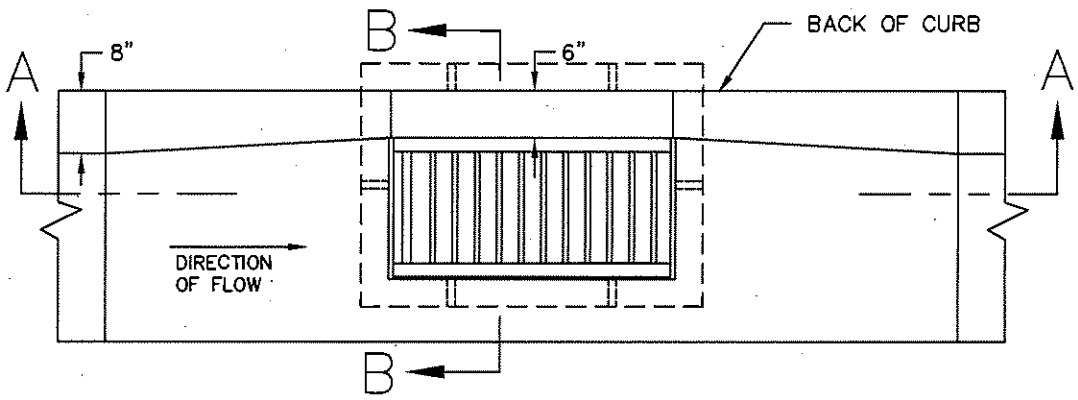

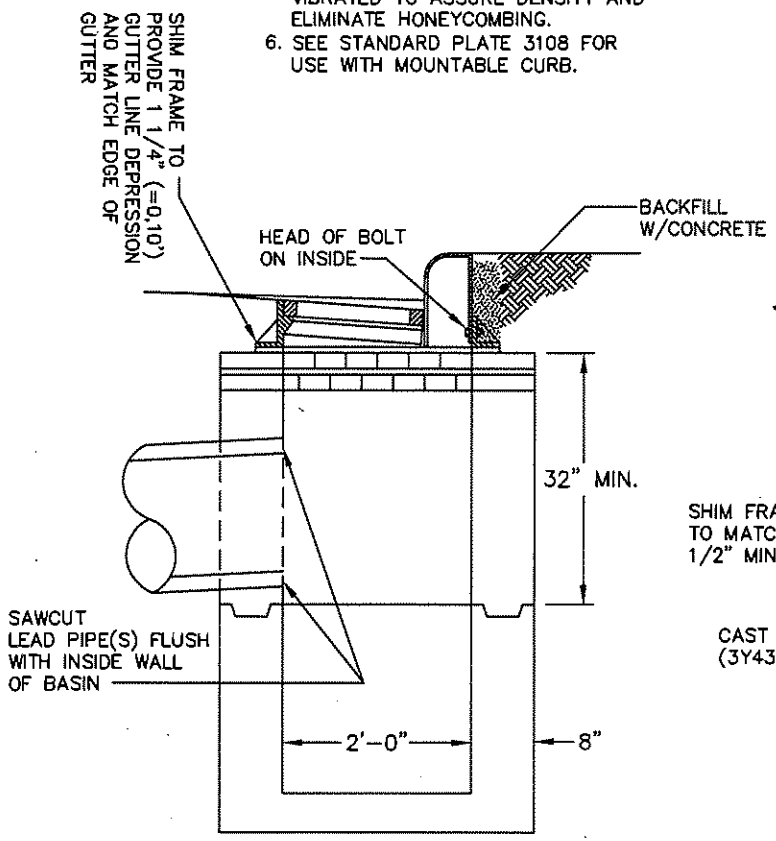

SEC. B-B

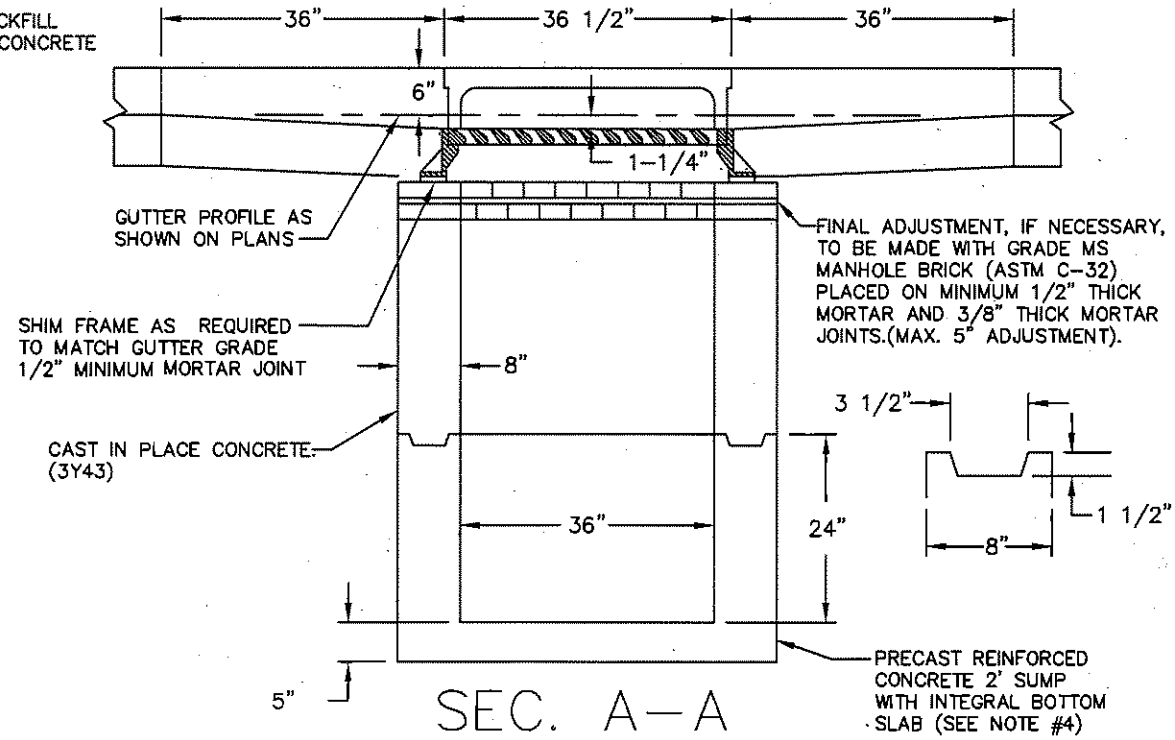

SEC. A-A

I hereby certify that this plan, specification or report was prepared by me or under my direct supervision and that I am a duly Licensed Professional Engineer under the laws of the State of Minnesota

JOSEPH J. MUELLER

Date 5-4-10 Lic. No. 13942

APPROVED

CITY ENGINEER

CITY OF ST. PAUL
DEPARTMENT OF PUBLIC WORKS

CATCH BASIN, TYPE 7A

Date of Revision: MAY 2010

Standard Plate No. 2015G