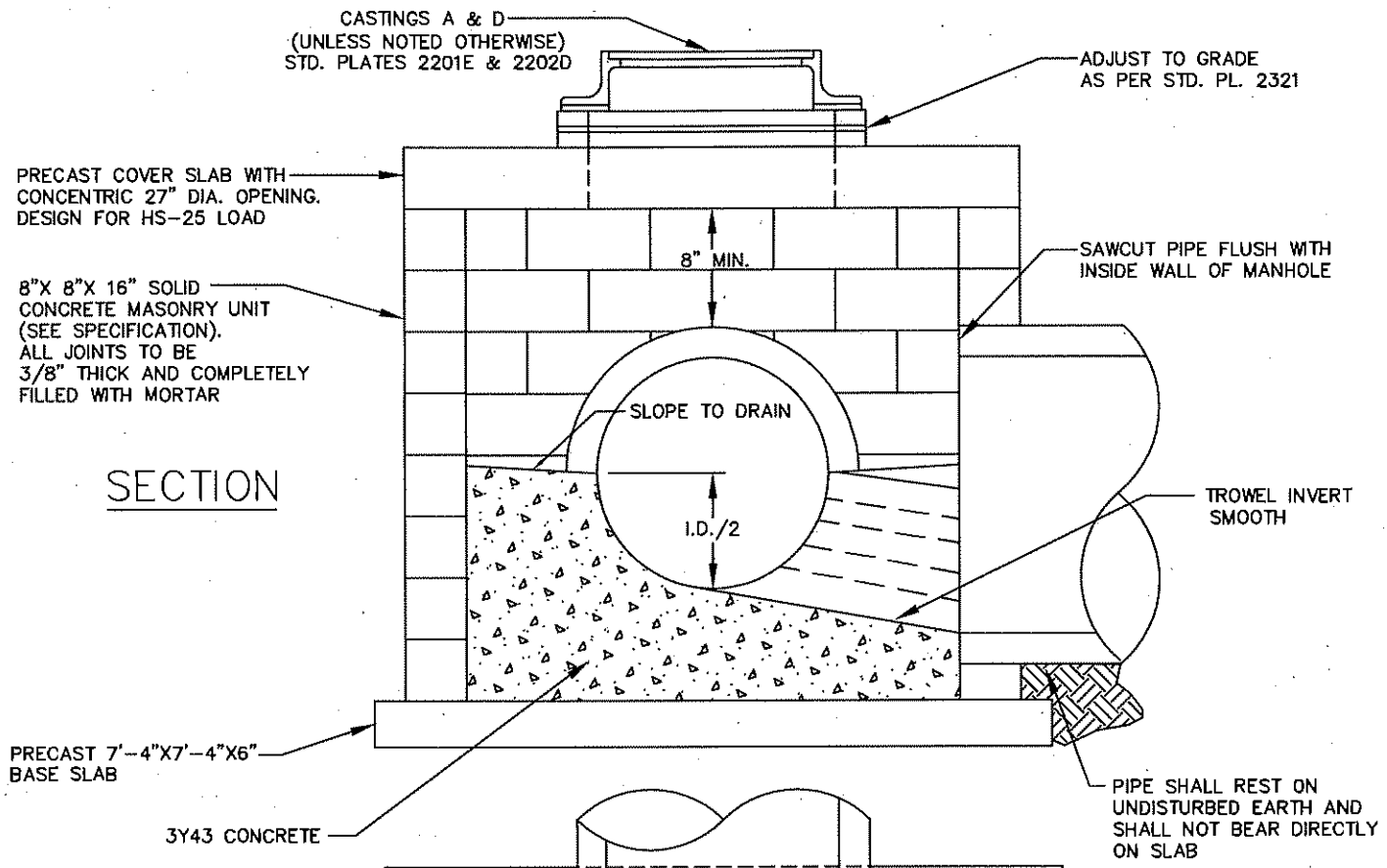

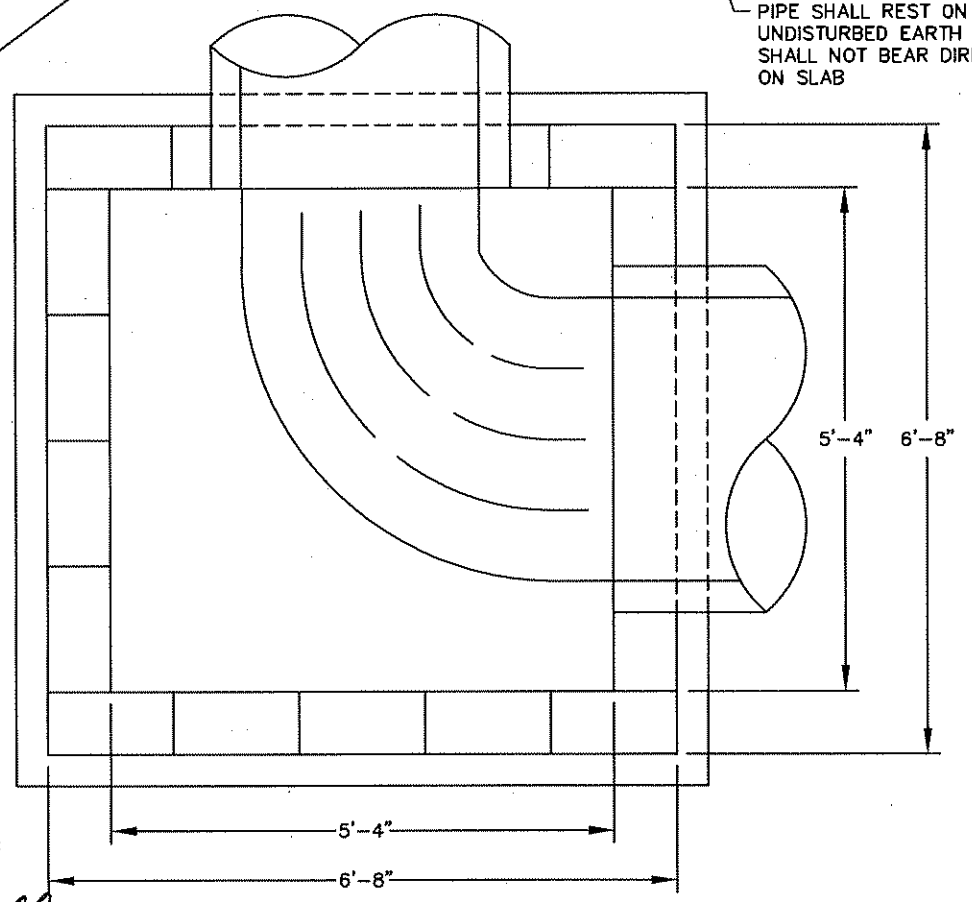

I hereby certify that this plan, specification or report was prepared by me or under my direct supervision and that I am a duly Licensed Professional Engineer under the laws of the State of Minnesota

JOSEPH J. MUELLER

Date 5-4-10 Lic. No. 13942

NOTE:
THIS MANHOLE FOR USE ON SEWER MAINS 42" & 48" IN DIA. WHERE DEPTH TO PIPE INVERT IS 9' OR LESS.

APPROVED CITY ENGINEER	CITY OF ST. PAUL DEPARTMENT OF PUBLIC WORKS MANHOLE, TYPE IV-A	Date of Revision MAY 2010	Standard Plate No. 2110C