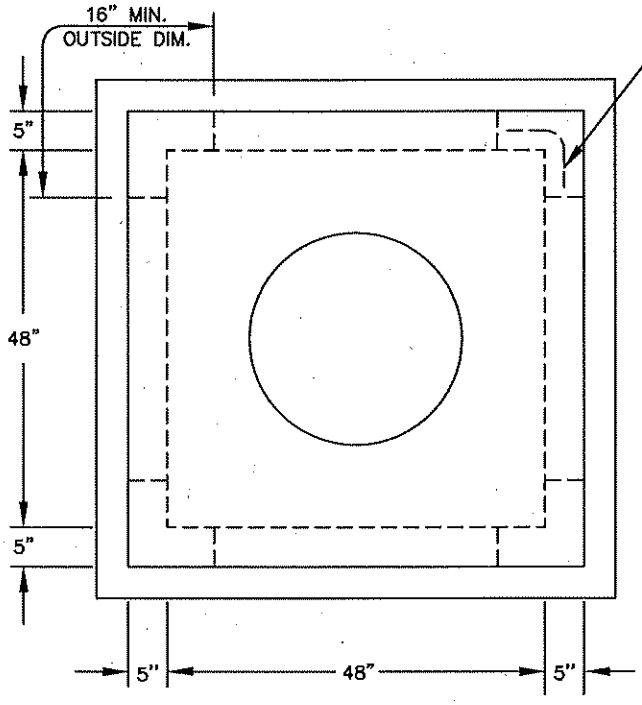

REINFORCING EXTENDING TO 1" MIN. CLR. AT CORNERS OR CONTINUOUS REINF. AROUND CORNERS

REINFORCING

TWO LAYERS
INSIDE AREA =3/16 SQ.IN/FT
OUTSIDE AREA = 3/16 SQ.IN/FT

1 IN. MINIMUM CLEARANCE

CIRCUMFERENTIAL REINFORCING SPACING NOT TO EXCEED 2 IN.

LONGITUDINAL REINFORCING SPACING NOT TO EXCEED 8 IN.

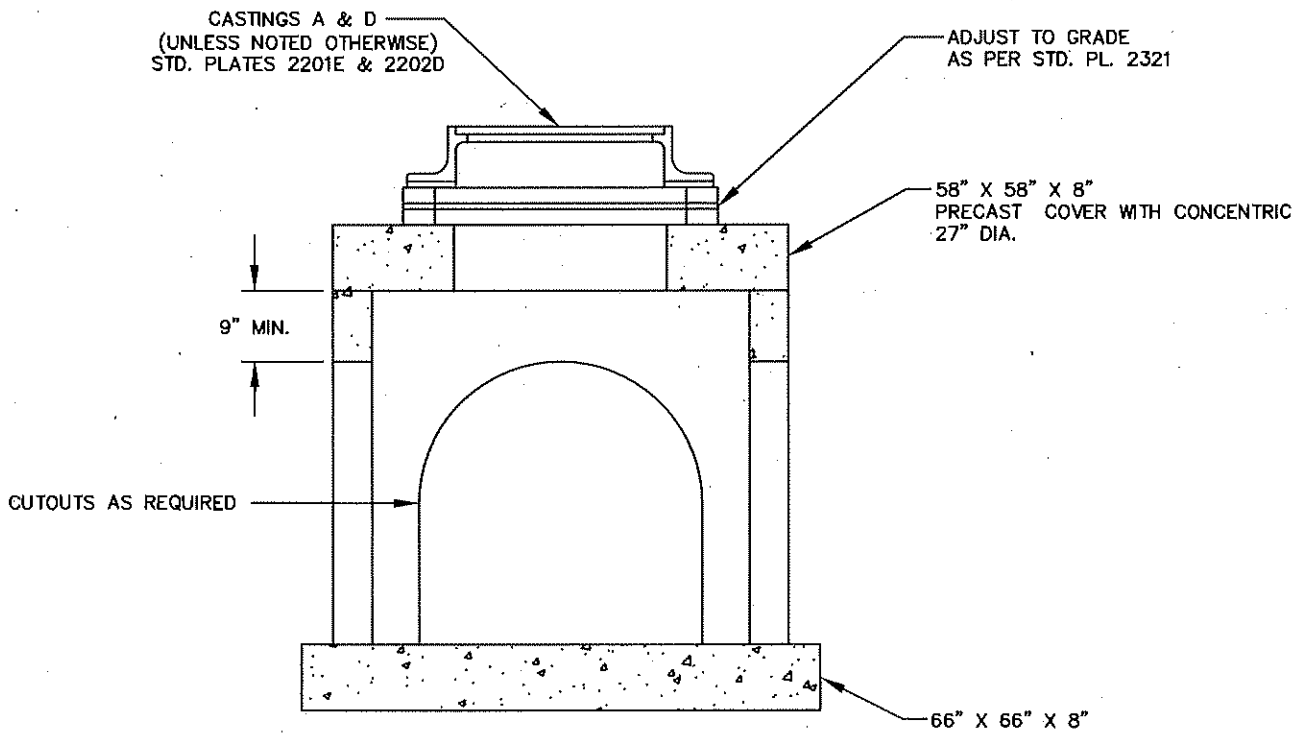

I hereby certify that this plan, specification or report was prepared by me or under my direct supervision and that I am a duly Licensed Professional Engineer under the laws of the State of Minnesota

JOSEPH J. MUELLER

Date 5-4-10 Lic. No. 13942

NOTE:
FOR USE ON STORM SEWER 36"I.D. OR LESS WITH A MAXIMUM DEPTH TO PIPE INVERT OF 9 FT.

APPROVED CITY ENGINEER	CITY OF ST. PAUL DEPARTMENT OF PUBLIC WORKS MANHOLE, TYPE IV PRECAST	Date of Revision MAY 2010	Standard Plate No. 2111B