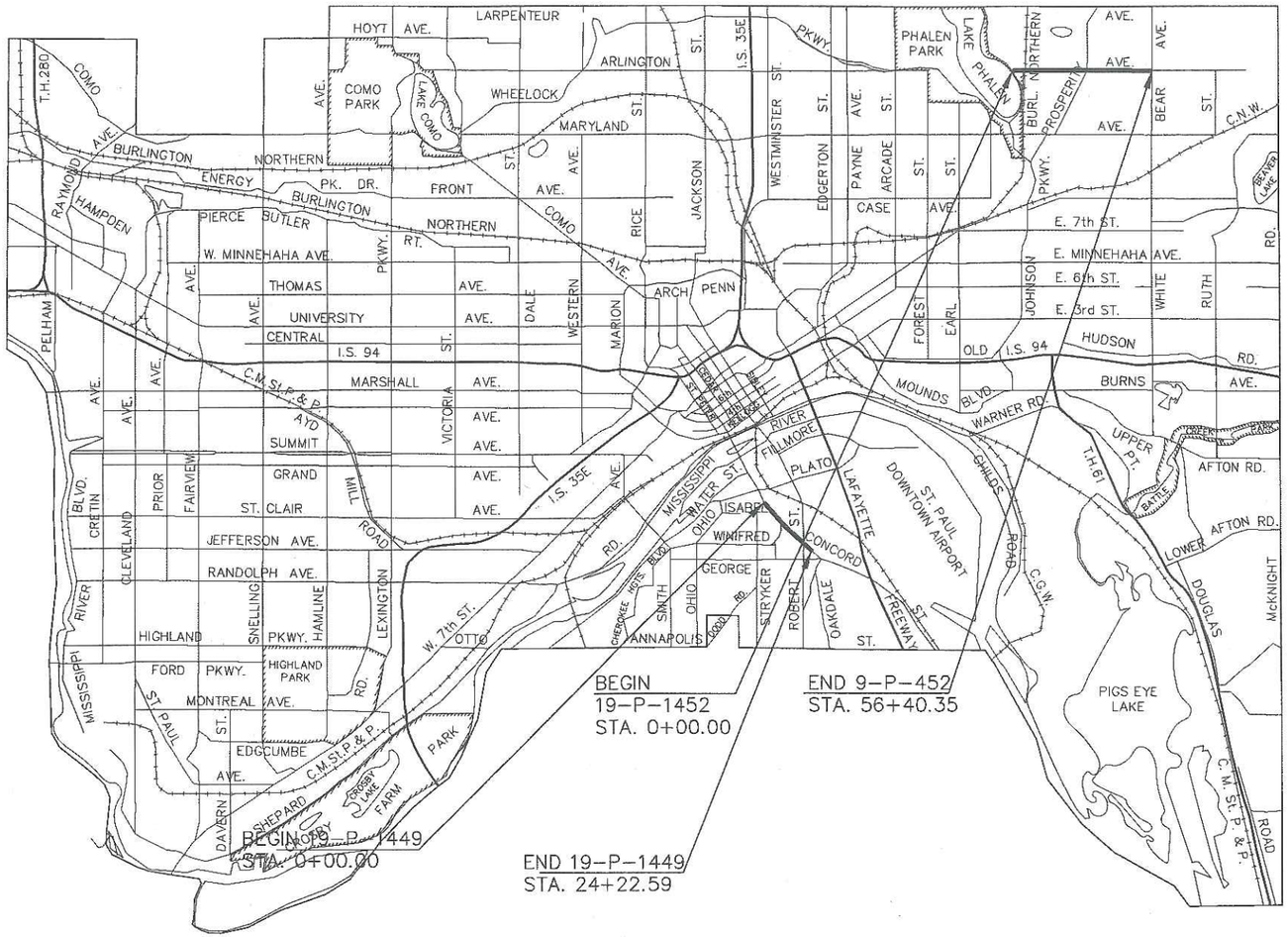

5000'

CITY OF ST. PAUL

Department of Public Works

CONSTRUCTION PLAN

of

CONCRETE SIDEWALKS AND PEDESTRIAN IMPROVEMENTS ON

EAST ARLINGTON AVENUE

from

EAST SHORE TO WHITE BEAR AVENUE

CITY PROJECT NO. 19-P-1452

includes

CESAR CHAVEZ STREET

from

LIVINGSTON TO CONGRESS

CITY PROJECT NO. 19-P-1449

PLAN SHEET INDEX

1. TITLE SHEET.
2. LEGEND AND LOCATION MAP.
3. STATEMENT OF ESTIMATED QUANTITIES.
4–5. SEWER CHARTS.
6. EROSION AND SEDIMENT CONTROL PLAN
7–13. STANDARD DETAIL PLATES, CONSTRUCTION DETAILS
14–18. PAVING PLANS

APPROVED Nick Ottem Manager Street Engineering/Construction Division DATE 4/26/19

APPROVED Paul Kurtz Saint Paul City Engineer DATE 4/26/2019

SPECIFICATIONS

THE 2019 EDITION OF THE MINNESOTA DEPARTMENT OF TRANSPORTATION "STANDARD SPECIFICATIONS FOR CONSTRUCTION" SHALL GOVERN. THESE SHALL BE FURTHER AMENDED BY THE CITY OF SAINT PAUL "STANDARD SUPPLEMENTAL SPECIFICATIONS FOR CONSTRUCTION" AND THE SPECIAL PROVISIONS.

ALL TRAFFIC CONTROL DEVICES AND SIGNING SHALL CONFORM TO THE LATEST EDITION OF THE MMUTCD, INCLUDING "FIELD MANUAL FOR TEMPORARY TRAFFIC CONTROL ZONE LAYOUTS"

THIS PLAN CONTAINS 18 SHEETS

THE SUBSURFACE UTILITY INFORMATION IN THIS PLAN IS UTILITY QUALITY LEVEL D. THIS QUALITY LEVEL WAS DETERMINED ACCORDING TO THE GUIDELINES OF CI/ASCE 38-02, ENTITLED "STANDARD GUIDELINES FOR THE COLLECTION AND DEPICTION OF EXISTING SUBSURFACE UTILITY DATA".

DESIGNED	BRB	I HEREBY CERTIFY THAT THIS PLAN WAS PREPARED BY ME OR UNDER MY DIRECT SUPERVISION AND THAT I AM A DULY LICENSED PROFESSIONAL ENGINEER UNDER THE LAWS OF THE STATE OF MINNESOTA.	PREPARED BY STREET ENGINEERING DIVISION FOR THE CITY OF ST. PAUL, DEPARTMENT OF PUBLIC WORKS
DRAWN	ASO	Signature: Date: 4/26/19	EAST ARLINGTON STREET
APPROVED	BRB	Lic. No: 43099	

PROJECT: 19-P-1452	STATE AID PROJECT NUMBER:		
DRAWER: 12	CAD NAME: PROJECTS/CURRENT/ARLINGTON STREET/DWG		
DWG. NO. 1618	DATE: 4/8/2019	SHEET NO. 1 OF 18 SHEETS	

Z:\streets\streets\projects\current\Arlington St.- Mill overlay\DWG\ALINGTON STREET - Title.dwg Apr 09, 2019 - 10:55am

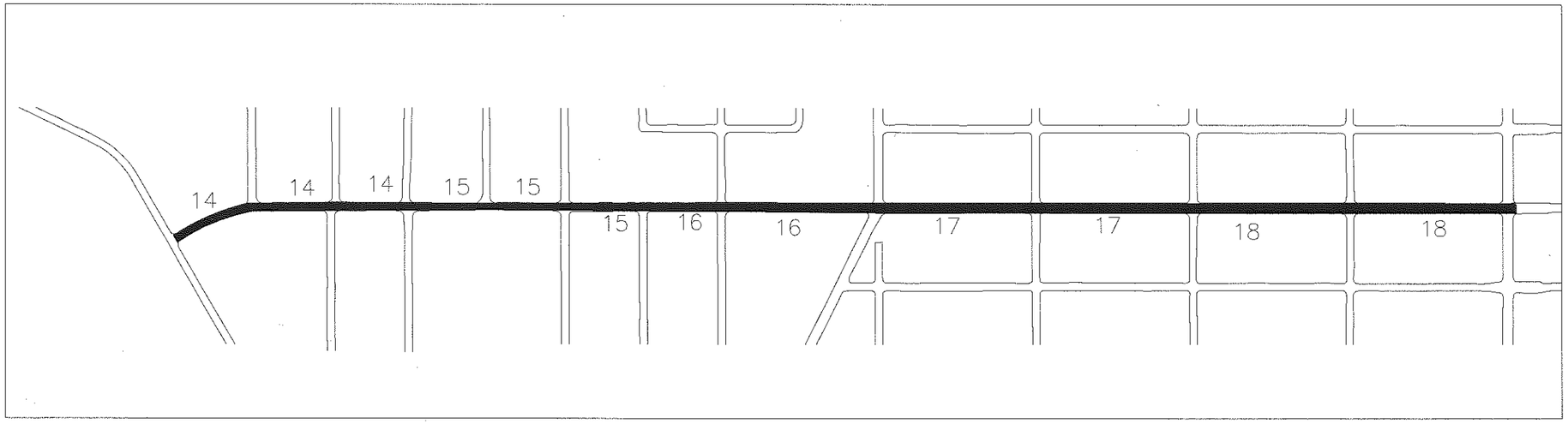

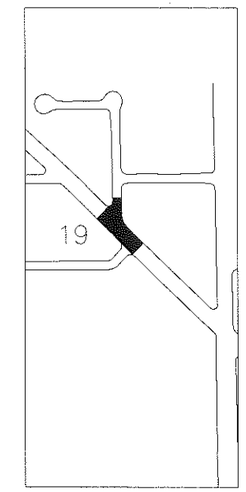

EXISTING & REMOVAL LEGEND

- EXISTING CURB & GUTTER
- EXISTING CURB
- EXISTING WALK
- HYDRANT
- UTILITY POLE
- LIGHT STANDARD
- TRAFFIC SIGNAL
- PULLBOX
- UTILITY MANHOLE
- EXISTING MANHOLE (NO. REFERS TO EXISTING SEWER CHART)
- EXISTING CATCH BASIN (NO. REFERS TO EXISTING SEWER CHART)
- EXISTING SIDE INLET
- 12" EXISTING SEWER
- EXISTING PIPE OR C.B. LEAD, CONSTR. 8" BRICK BULKHEAD
- EXISTING UTILITY GATE VALVE
- EXISTING WATER VALVE
- W EXISTING WATER MAIN
- G EXISTING GAS MAIN
- T.S. EXISTING CONDUIT (L=LIGHTING, T=TELEPHONE, E=ELECTRIC, T.S.=TRAFFIC SIGNAL, F.O.=FIBER OPTIC)
- 12" EXISTING TREE (NO. REFERS TO SIZE)
- REMOVE CONCRETE CURB AND GUTTER
- REMOVE CONCRETE CURB OR SANDSTONE CURB
- SALVAGE GRANITE CURB
- REMOVE CONCRETE WALK
- REMOVE CONCRETE DRIVE
- 12" REMOVE TREE (NO. REFERS TO SIZE)
- S REMOVE STUMP
- REMOVE PAVEMENT OR TRENCH PAVEMENT
- REMOVE CONCRETE STEPS
- MILL BITUMINOUS SURFACE
- A ASPHALT DRIVE
- C CONCRETE DRIVE
- D DIRT DRIVE
- G GRAVEL DRIVE
- B BRICK DRIVE

CONSTRUCTION LEGEND

- CONSTRUCT PAVEMENT (SEE TYPICAL SECTIONS)
- BITUMINOUS OVERLAY
- PAVEMENT OR TRENCH PAVEMENT RESTORATION
- CONSTRUCT CURB OR CURB & GUTTER (SEE TYPICAL SECTION FOR TYPE)
- CONSTRUCT CURB & GUTTER (SEE TYPICAL SECTION FOR TYPE)
- 138 ADJUST MANHOLE (NO. REFERS TO EXISTING SEWER CHART)
- ADJUST UTILITY MANHOLE
- CONSTRUCT CONCRETE WALK (4" THICK MAINLINE WALK AND CUTWALKS) (6" THICK IN PEDESTRIAN RAMP AREAS)
- CONSTRUCT CONCRETE DRIVEWAY PAVEMENT (TYPE 6) 6" THICK UNLESS OTHERWISE NOTED.
- EXCAVATE FOR NEW WATER HYDRANT – EXCAVATE FOR NEW GATE VALVE HOUSING
- ADJUST EXISTING GATE VALVE HOUSING OR EXCAVATE FOR NEW GATE VALVE HOUSING
- R PEDESTRIAN CURB RAMP– R INDICATES TRUNCATED DOMES
- 215 CONSTRUCT CATCH BASIN (NO. REFERS TO SEWER CONST. CHART)
- CONSTRUCT CATCH BASIN LEAD (15" DIA. UNLESS OTHERWISE NOTED)
- 120 NEW MANHOLE– TYPE AS NOTED (NO. REFERS TO SEWER CONST. CHART)
- 72 NEW TYPE IV OR IV–A MANHOLE MANHOLE (NO. REFERS TO SEWER CONST. CHART)
- CONSTRUCT POSSIBLE SANITARY SERVICE RECONNECTION
- LEAD WATER SERVICE

NOTES

1. WATER, GAS, ELECTRIC, TELEPHONE COMMUNICATION, SEWER AND T.V. CABLE LINES SHOWN ON THE DRAWINGS AND CROSS–SECTIONS ARE PLOTTED FROM THE BEST INFORMATION AVAILABLE AT THE TIME OF PLAN PREPARATION, BUT MAY NOT REFLECT ACTUAL LOCATIONS OR ELEVATIONS. THE CONTRACTOR SHALL VERIFY LOCATIONS OF ALL UTILITIES BEFORE BEGINNING CONSTRUCTION WHICH MAY BE AFFECTED BY A UTILITY CONFLICT. THE CONTRACTOR SHALL GIVE 48 HOURS NOTICE TO THE OWNERS OF ALL KNOWN UTILITIES BEFORE STARTING ANY OPERATIONS AFFECTING THOSE PROPERTIES, OR BEGINNING EXCAVATION IN THE VICINITY OF THOSE PROPERTIES. THE CONTRACTOR'S ATTENTION IS DIRECTED TO SECTION 1507 IN THE STANDARD SPECIFICATIONS.
2. ALL CURB RADII 20 FEET UNLESS OTHERWISE NOTED.
3. WHERE EXISTING UTILITIES ARE IN CONFLICT WITH SEWER CONSTRUCTION, THE UTILITY COMPANY WILL RELOCATE, OFFSET OR SUPPORT THE UTILITY UNLESS OTHERWISE INDICATED ON THE PLAN SHEET OR STATED IN THE SPECIAL PROVISIONS.
4. WHERE EXISTING FIRE HYDRANTS AND/OR LIGHT STANDARDS CONFLICT WITH SEWER CONSTRUCTION, THEY WILL BE RELOCATED BY OTHERS.
5. GAS MAINS SHOWN ON THE PLAN SHEETS ARE EXISTING MAINS. IN CONJUNCTION WITH THIS SEWER AND PAVING PROJECT, XCEL ENERGY MAY
6. ALL CONCRETE WALK IN QUADRANT AREAS AT THE CORNERS OF INTERSECTIONS SHALL BE 6" THICK.
7. RECORDS INDICATE THERE ARE PROPERTY IRONS AT THE BLOCK CORNERS IN THE PROJECT AREA. DO NOT DISTURB THESE IRONS WHEN REMOVING CONCRETE PANELS. IF REMOVED, REPLACEMENT MUST BE BY A LICENSED SURVEYOR, AT THE CONTRACTOR'S EXPENSE.

NORTH

XXX PLAN SHEET NUMBER

LEGEND

DESIGNED	ASO	I HEREBY CERTIFY THAT THIS PLAN WAS PREPARED BY ME OR UNDER MY DIRECT SUPERVISION AND THAT I AM A DULY LICENSED PROFESSIONAL ENGINEER UNDER THE LAWS OF THE STATE OF MINNESOTA	PREPARED BY STREET ENGINEERING DIVISION FOR THE CITY OF ST. PAUL, DEPARTMENT OF PUBLIC WORKS
DRAWN	ASO	Signature: Barbara R. Marshall ENGINEER Date: 3/25/2019 Lic. No. 43099	ARLINGTON AVENUE
APPROVED	BRM		

PROJECT:	19–P–1452	STATE AID PROJECT NUMBER:	
DRAWER:	12	CAD NAME:	PROJECTS/CURRENT/ARLINGTON/LEGEND//DWG
DWG. NO.	1618	DATE: 03/25/2019	SHEET NO. 2 OF 19 SHEETS

\\Teal\cad\streets\streets\projects\current\Arlington St.– Mill overlay\DWG\Arlington– LEGEND.dwg Apr 24, 2019 – 7:52am

ITEM NO.	ITEM	UNIT	TOTAL QUANTITY	ARLINGTON AVENUE QUANTITY	CESAR CHAVEZ STREET QUANTITY
2021.501	MOBILIZATION	LUMP SUM	1	0.75	0.25
2101.524	CLEARING	TREE	1		1
2101.524	GRUBBING	TREE	1		1
2101.624	TREE ROOT REMOVAL	TREE	1		1
2101.624	WOOD CHIP DISPOSAL	TREE	1		1
2104.502	REMOVE MANHOLE OR CATCH BASIN	EACH	10	8	2
2104.503	SAWING PAVEMENT	LIN. FT.	4640	4060	580
2104.503	REMOVE CONCRETE CURB AND GUTTER	LIN. FT.	1829	1572	257
2104.504	REMOVE TRENCH PAVEMENT	SQ. YD.	1873	1453	420
2104.505	REMOVE DRIVEWAY PAVEMNT	SQ. YD.	68	21	47
2104.518	REMOVE CONCRETE WALK	SQ. FT.	13524	11345	2179
2104.518	REMOVE INTEGRAL CURB AND WALK	SQ. FT.	200		200
2105.507	COMMON EXCAVATION	CU. YD.	190	154	36
2105.607	UNCLASSIFIED EXCAVATION AND HAUL	CU. YD.	80		80
2118.509	AGGREGATE SURFACING, CLASS 5	TON	3		3
2123.610	STREET SWEEPER (WITH PICKUP BROOM)	HOUR	35	30	5
2211.507	AGGREGATE BASE (CV) CLASS 5	CU. YD.	197	190	7
2301.504	CONCRETE PAVEMENT 6"	SQ. YD.	61		61
2301.602	DRILL AND GROUT DOWEL BAR (EPOXY COATED)	EACH	668	628	40
2301.602	DRILL AND GROUT REINFORCEMENT BAR (EPOXY COATED)	EACH	328	312	16
2357.506	BITUMINOUS MATERIAL FOR TACK COAT	GALLON	73	67	6
2360.509	TYPE SP 12.5 NON WEAR COURSE MIXTURE (3,B)	TON	446	411	35
2360.509	TYPE SP 12.5 WEARING COURSE MIXTURE (4,F)	TON	26		26
2503.503	15" RC PIPE SEWER,DESIGN 3006 CLASS V	LIN. FT.	375	260	115
2503.602	CONNECT INTO EXISTING DRAINAGE STRUCTURE	EACH	10	7	3
2504.602	ADJUST VALVE BOX	EACH	5	5	
2506.502	CONSTRUCT MANHOLE DESIGN TYPE IV	EACH	1		1
2506.502	CASTING ASSEMBLY	EACH	6	3	3
2506.602	CONSTRUCT CATCH BASIN DESIGN TYPE 7B	EACH	11	8	3
2506.602	ADJUST FRAME AND RING CASTING	EACH	4	3	1
2521.518	4" CONCRETE WALK	SQ. FT.	6430	5217	1213
2521.518	6" CONCRETE WALK	SQ. FT.	5663	5213	450
2531.503	CONCRETE CURB AND GUTTER DESIGN B624	LIN. FT.	1891	1597	294
2531.503	CONCRETE CURB AND GUTTER DESIGN B612 (MODIFIED)	LIN. FT.	348		348
2531.507	6" CONCRETE DRIVEWAY PAVEMENT	SQ. YD.	55		55
2531.603	CONCRETE CURB DESIGN V	LIN. FT.	388	388	
2531.618	TRUNCATED DOMES	SQ. FT.	660	600	60
2563.601	TRAFFIC CONTROL	LUMP SUM	1	0.75	0.25
2571.502	DECIDUOUS TREE, 2" CAL. B&B (KENTUCKY COFFEE TREE)	TREE	7		7
2571.502	DECIDUOUS TREE, 2" CAL. B&B (DISCOVERY ELM)	TREE	4		4
2571.601	TREE PROTECTION	TREE	3		3
2573.502	STORM DRAIN INLET PROTECTION	EACH	47	44	3
2574.607	TOPSOIL BORROW	CU. YD.	260	216	44
2105.607	STRUCTURAL SOIL (CV)	CU. YD.	80		80
2575.504	SODDING TYPE LAWN	SQ. YD.	1695	1388	307
2575.513	MULCH TYPE 6	CU. YD.	3		3

REVISED 6/10/19

STATEMENT OF ESTIMATED QUANTITIES

E. SHORE DRIVE TO CLARENCE (SHEET 14)

STR. NO.	STATION	LT.	CENTER	RT.	REMAIN AS IS	REMOVE MH	REMOVE CB	RECONSTRUCT MH	ADJUST MH
1	0+70	3			X				
2	2+90	7			X				
3	3+36			14	X				
4	3+33	14			X				
5	3+65	LT.			X				
6	3+66	LT.			X				
7	3+85	LT.			X				
8	4+31	18'					X		
9	4+41			18'					X
10	4+59			18'	X				
11	7+05		X		X				
12	7+24	LT.			X				
13	7+29			RT	X				
14	7+51			18			X		
15	7+64	18'			X				
16	10+18		X		X				
17	10+32		X		X				
18	10+15	LT.			X				
19	10+43	LT.			X				
20	10+69	18'			X				
21	10+78			18'	X				
22	11+10			RT.	X				

CLARENCE TO WINCHELL (SHEET 15)

STR. NO.	STATION	LT.	CENTER	RT.	REMAIN AS IS	REMOVE MH	REMOVE CB	RECONSTRUCT MH	ADJUST MH
23	13+50	LT.			X				
24	13+66		X		X				
25	13+67			RT.	X				
26	13+75	LT.			X				
27	13+86			18'	X				
28	14+16	18'			X				
29	16+85	51			X				
30	16+85			51	X				
31	16+99		X		X				
32	17+05			7	X				
33	17+07	20			X				
34	17+11	51			X				
35	17+11			51	X				
36	17+33			18	X				
37	17+41	18			X				

CLARENCE TO WINCHELL (SHEET 15)

STR. NO.	STATION	LT.	CENTER	RT.	REMAIN AS IS	REMOVE MH	REMOVE CB	RECONSTRUCT MH	ADJUST MH
38	20+14			45	X				
39	20+28		X		X				
40	20+34	18			X				
41	20+34			5	X				
42	20+35	15			X				
43	20+40			8	X				
44	20+69			51	X				

BARCLAY TO GERMAIN (SHEET 16)

STR. NO.	STATION	LT.	CENTER	RT.	REMAIN AS IS	REMOVE MH	REMOVE CB	RECONSTRUCT MH	ADJUST MH
45	23+47	51			X				
46	23+47		X		X				
47	23+47			51	X				
48	23+47		X		X				
49	23+71	51			X				
50	23+71			51	X				
51	23+99	18			X				
52	23+99			18	X				
53	24+41	10			X				

GERMAIN TO KENNARD (SHEET 17)

STR. NO.	STATION	LT.	CENTER	RT.	REMAIN AS IS	REMOVE MH	REMOVE CB	RECONSTRUCT MH	ADJUST MH
54	36+41	18			X				
55	36+41			18	X				
56	36+41	51			X				
57	36+41		X		X				
58	36+90			7					X
59	36+41			51	X				
60	37+21	18				X			
61	37+22			18		X			
62	43+04	18					X		
63	43+04			18			X		
64	43+04		X						
65	43+28			12					
66	43+28	51							
67	43+44		X						X
68	43+57	52							
69	43+84	19					X		
70	43+80		19				X		
71	43+86	8							
72	43+95			5					X

FLANDRAU TO WHITE BEAR (SHEET 18)

STR. NO.	STATION	LT.	CENTER	RT.	REMAIN AS IS	REMOVE MH	REMOVE CB	RECONSTRUCT MH	ADJUST MH
73	49+71			13					
74	49+89	51							
75	50+01		X						
76	50+12	51							
77	50+33			6					X
78	50+48			18			X		
79	50+43	18					X		

CESAR CHAVEZ (SHEET 19)

STR. NO.	STATION	LT.	CENTER	RT.	REMAIN AS IS	REMOVE MH	REMOVE CB	RECONSTRUCT MH	ADJUST MH
300	1+64			28	X				
301	1+66			1	X				
302	1+77	46			X				
303	1+96	46							
304	2+31	45					X		
305	2+38			2.5					X
306	2+58	31					X		

EXISTING SEWER CHART

DESIGNED	ASO	I HEREBY CERTIFY THAT THIS PLAN WAS PREPARED BY ME OR UNDER MY DIRECT SUPERVISION AND THAT I AM A DULY LICENSED PROFESSIONAL ENGINEER UNDER THE LAWS OF THE STATE OF MINNESOTA
DRAWN	ASO	Signature: Barbara R. Mundahl Date: 4/3/2019
APPROVED	BRM	BARBARA R. MUNDAHL Lic. No. 43099

PREPARED BY STREET ENGINEERING DIVISION FOR THE CITY OF ST. PAUL, DEPARTMENT OF PUBLIC WORKS

ARLINGTON AVENUE

PROJECT: 19-P-1452 | STATE PROJECT NUMBER:
DRAWER: 12 | CAD NAME: PROJECTS/CURRENT/ARLINGTON/CHART/DWG
DWG. NO. 1618 | DATE: 4/3/2019 | SHEET NO. 4 OF 19 SHEETS

\\Teal\cad\streets\streets\projects\current\Arlington St.- Mill overlay\DWG\ARLINGTON-Sewer Charts1.dwg Apr 26, 2019 - 9:44am

ENGLISH TO CLARENCE(SHEET 14)									
STR NO.	STATION	LT.	CENTER	RT.	MH	CB	LENGTH	SIZE	TYPE
200	4+89	18				7B	6	15"	R.C.P.
201	7+57			18		7B	6	15"	R.C.P.
GERMAIN TO KENNARD (SHEET 17)									
STR NO.		LT.		RT.	MH	CB	LENGTH	SIZE	TYPE
202	37+38	18				7B	36	15"	R.C.P.
203	37+38			18		7B	49	15"	R.C.P.
204	42+85			18		7B	42	15"	R.C.P.
205	42+85	18				7B	32	15"	R.C.P.
206	44+02			18		7B	10	15"	R.C.P.
207	44+02	18				7B	18	15"	R.C.P.
FLANDRAU TO WHITE BEAR (SHEET 18)									
STR NO.	STATION	LT.		RT.	MH	CB	LENGTH	SIZE	TYPE
208	50+64			18		7B	28	15"	R.C.P.
209	50+64	18				7B	33	15"	R.C.P.
CESAR CHAVEZ (SHEET 19)									
STR NO.	STATION	LT.		RT.	MH	CB	LENGTH	SIZE	TYPE
400	1+95	79				7B	49	15"	R.C.P.
401	1+95			28		7B	49	15"	R.C.P.
402	2+31	45				TYPE IV		15"	R.C.P.
403	2+57	31				TYPE IV		15"	R.C.P.
404	2+75	28				7B	17	15"	R.C.P.

PROPOSED SEWER CHART

DESIGNED	ASO	I HEREBY CERTIFY THAT THIS PLAN WAS PREPARED BY ME OR UNDER MY DIRECT SUPERVISION AND THAT I AM A DULY LICENSED PROFESSIONAL ENGINEER UNDER THE LAWS OF THE STATE OF MINNESOTA	PREPARED BY STREET ENGINEERING DIVISION FOR THE CITY OF ST. PAUL, DEPARTMENT OF PUBLIC WORKS
DRAWN	ASO	Signature: Barbara R. Mundahl Date: 4/3/2019	ARLINGTON AVENUE
APPROVED	BRM	BARBARA R. MUNDAHL Lic. No. 43099	

PROJECT:	19-P-1452	STATE PROJECT NUMBER:	
DRAWER:	12	CAD NAME:	PROJECTS/CURRENT/ARLINGTON/SEWER CHART/DWG
DWG. NO.	1618	DATE: 4/3/2019	SHEET NO. 5 OF 19 SHEETS

\\fsa\cad\streets\projects\current\Arlington St.- Mill overlay\DWG\ARLINGTON-Sewer Charts1.dwg Apr 26, 2019 - 9:46am

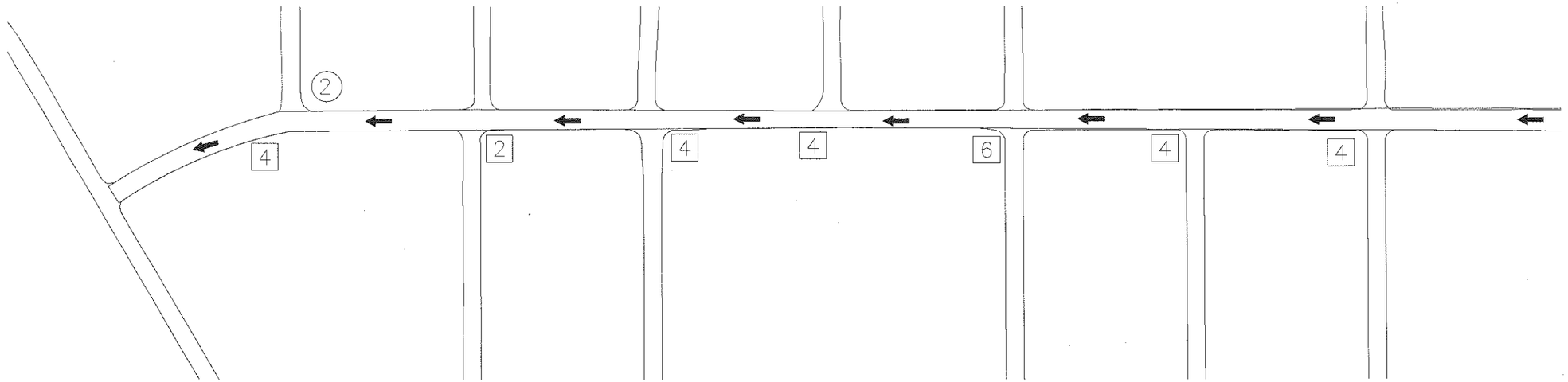

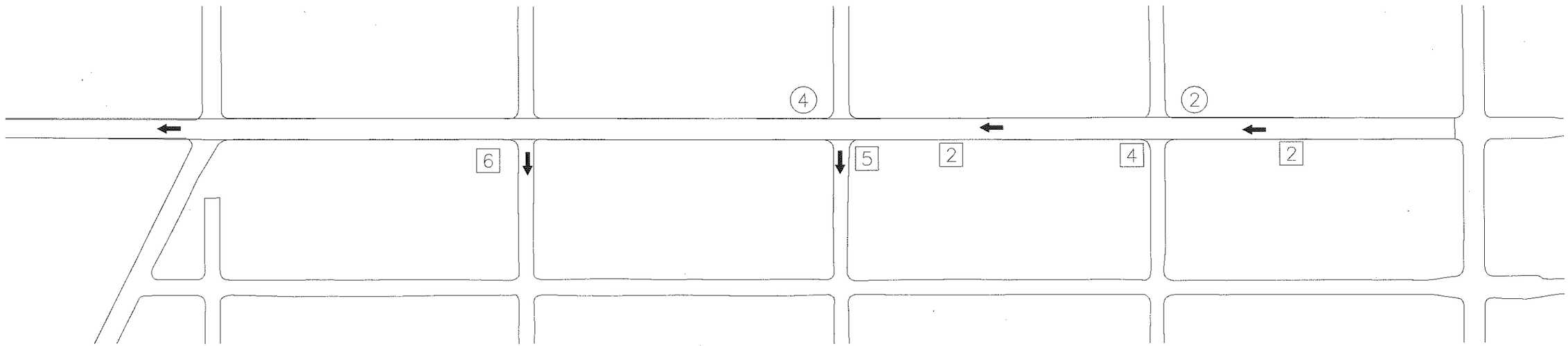

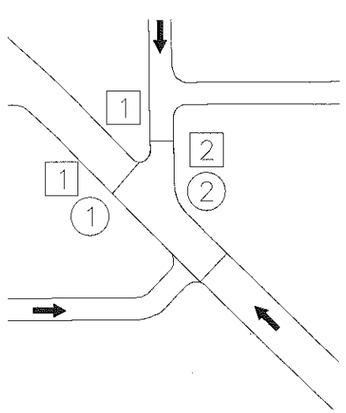

LEGEND:

→ DIRECTION OF FLOW

(2) INTERIM SEDIMENT CONTROL AND STORM DRAIN INLET PROTECTION FOR NEW CATCH BASINS SEE DETAIL (NO. INDICATES CB'S REQUIRING CONTROL)

[2] EXISTING CATCH BASINS REQUIRING STORM DRAIN INLET PROTECTION SEE DETAIL (NO. INDICATES CB'S REQUIRING CONTROL.)

SEE SAINT PAUL STANDARD PLATE 2400A FOR STORM DRAIN INLET PROTECTION

NORTH

EROSION AND SEDIMENT CONTROL

SAINT PAUL	DESIGNED	BRM	I HEREBY CERTIFY THAT THIS PLAN WAS PREPARED BY ME OR UNDER MY DIRECT SUPERVISION AND THAT I AM A DULY LICENSED PROFESSIONAL ENGINEER UNDER THE LAWS OF THE STATE OF MINNESOTA	PREPARED BY STREET ENGINEERING DIVISION FOR THE CITY OF ST. PAUL, DEPARTMENT OF PUBLIC WORKS	PROJECT: 19-P-1452	STATE PROJECT NUMBER:
	DRAWN	ASO	Signature: Barbara R. Mundahl Date: 4/3/2019	ARLINGTON AVENUE	DRAWER: 12	CAD NAME: PROJECTS/CURRENT/ARLINGTON/ERROSION/DWG
	APPROVED	BRM	BARBARA R. MUNDAHL Lic. No. 43099		DWG. NO. 1618	DATE: 4/3/2019 SHEET NO. 6 OF 19 SHEETS

\\Fed\cad\streets\streets\projects\current\Arlington St- Mill overlay\DWG\Arlington- EROSION.dwg Apr 26, 2019 - 9:41am

STANDARD DETAIL PLATES	
ST. PAUL DRG. NO.	STANDARD DETAIL
1206D	CONCRETE DRIVEWAY, TYPE 6
1304C	SIGN COLLAR PLACEMENT
2007F	CATCH BASIN, DESIGN TYPE 3C
2015I	CATCH BASIN, DESIGN TYPE 7A
2016B	CATCH BASIN, DESIGN TYPE 7B
2101E	MANHOLE, TYPE I
2102E	MANHOLE, TYPE II
2103F	MANHOLE, TYPE III & III-S
2104F	MANHOLE, TYPE IV
2107D	MANHOLE, TYPE VII
2201F	FRAME CASTING A
2202D	COVER CASTINGS B
2203	COVER CASTINGS D
2207D	MANHOLE ADAPTOR RINGS
2211	CATCH BASIN, DESIGN TYPE 7A CASTING DETAILS
2212A	MODIFIED TYPE 7A
2306F	RECONNECTION OF HOUSE SERVICES
2309D	CATCH BASIN CONNECTION
2311B	ANCHOR CLAMP DETAIL
2317C	TYPES OF TRENCH BEDDING
2318D	CONCRETE SADDLE FOR PIPE CROSSINGS
2319D	SADDLE CONNECTIONS FOR HOUSE SERVICES
2321B	MANHOLE ADJUST
2322F	MANHOLE RECONSTRUCT
3000B	CONCRETE CURB
3003C	PEDESTRIAN CURB RAMP FOR THE HANDICAPPED
3005E	PEDESTRIAN CURB RAMP FOR THE HANDICAPPED
3006E	PEDESTRIAN CURB RAMP FOR THE HANDICAPPED
3008A	SAWED / SEALED JOINTS
3100C	CONCRETE CURB AND GUTTER, DESIGN B
3102B	CONC. CURB & GUTTER OPENING FOR DRIVEWAYS
3107A	CONC. CURB & GUTTER DESIGN D-418
4031B	BARRICADE DESIGNS
4032A	BARRICADING FOR STREET CLOSURE
4035A	WARNING LIGHTS AND CHANNELIZING DEVICES
4036	BARRICADING FOR SIDEWALK REPLACEMENT
6200B	RESET MONUMENT
	MnDOT STANDARD DETAIL PLATES
THESE STANDARD PLATES AS APPROVED BY THE FHWA SHALL APPLY	
MnDOT DRG. NO.	STANDARD DETAIL
3000L	REINFORCED CONCRETE PIPE (5 SHEETS)
3006G	GASKET JOINT FOR R. C. PIPE (2 SHEETS)
3100G	CONCRETE APRON FOR REINFORCED CONCRETE PIPE
3145G	CONCRETE PIPE TIES
4010H	CONCRETE SHORT CONE & ADJUSTING RING
7038A	DETECTABLE WARNING SURFACE TRUNCATED DOMES
8000J	CHANNELIZER
8307S	TRAFFIC BARRIER

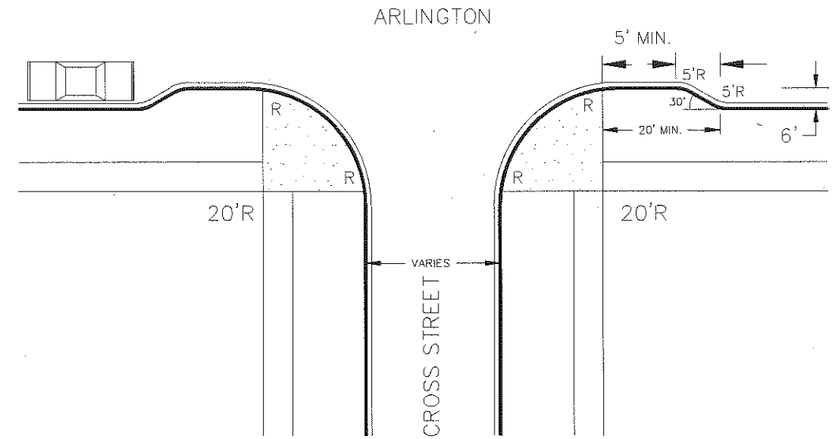

CURB BUMPOUT DETAILS
NO SCALE

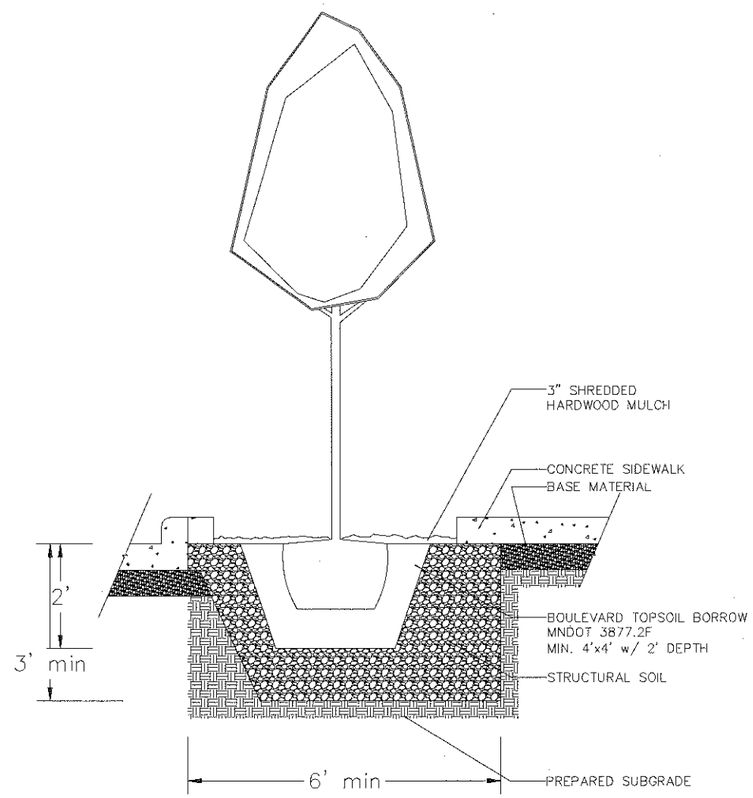

TREE PLANTING DETAIL

NOTES:

1. APPROVED STRUCTURAL SOIL TO BE INSTALLED PER SPECIFICATIONS ON PREPARED SUBGRADE.
2. VOLUME OF STRUCTURAL SOIL TO BE A MINIMUM OF 10 CUBIC YARDS PER TREE.
3. STRUCTURAL SOILS SHALL BE FREE OF LIMESTONE, CONCRETE, OR BITUMINOUS.
4. IMPERMEABLE MEMBRANES LINERS ONLY TO BE USED WHEN REQUIRED.
5. DRAINAGE VIA PERFORATED PIPE SHALL BE PROVIDED WHEN IMPERMEABLE MEMBRANE LINERS ARE REQUIRED OR WHERE SOIL INFILTRATION IS LIMITED.

STANDARD PLATES
CONSTRUCTION DETAILS

SAINT PAUL	DESIGNED	ASO	I HEREBY CERTIFY THAT THIS PLAN WAS PREPARED BY ME OR UNDER MY DIRECT SUPERVISION AND THAT I AM A DULY LICENSED PROFESSIONAL ENGINEER UNDER THE LAWS OF THE STATE OF MINNESOTA
	DRAWN	ASO	Signature: Barbara R. Mundahl BARBARA R. MUNDAHL Date: 4/17/2019 43099
	APPROVED	BRM	

PREPARED BY STREET ENGINEERING DIVISION FOR THE CITY OF ST. PAUL, DEPARTMENT OF PUBLIC WORKS

ARLINGTON AVENUE

PROJECT:	19-P-1452	STATE AID PROJECT NUMBER:	
DRAWER:	12	CAD NAME:	PROJECTS/CURRENT/ARLINGTON/DWG
DWG. NO.	1618	DATE: 4/17/2019	SHEET NO. 7 OF 19 SHEETS

\\Tea\cad\streets\streets\projects\current\Arlington St- Mill overlay\DWG\ARLINGTON-details.dwg Apr 26, 2019 - 12:30pm

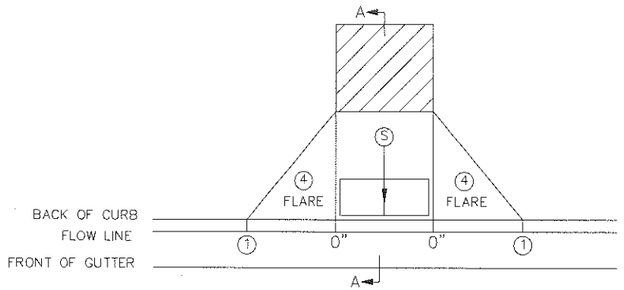

PERPENDICULAR

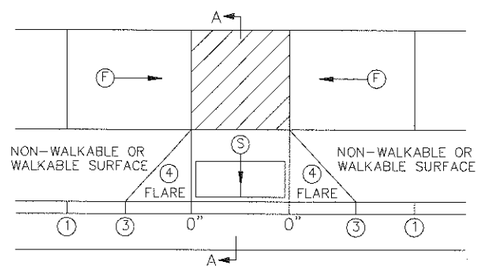

TIERED PERPENDICULAR

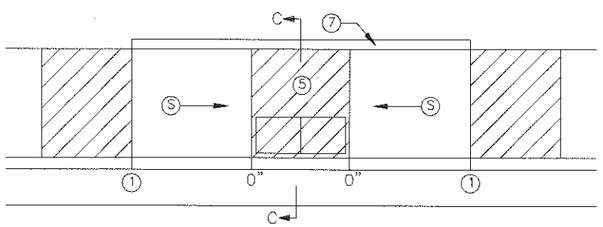

PARALLEL

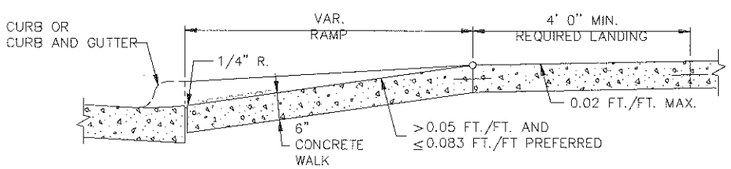

SECTION A–A

PERPENDICULAR/TIERED/DIAGONAL

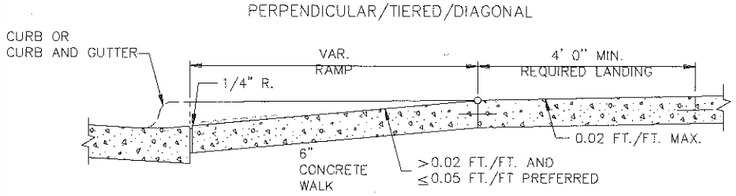

SECTION B–B

FAN

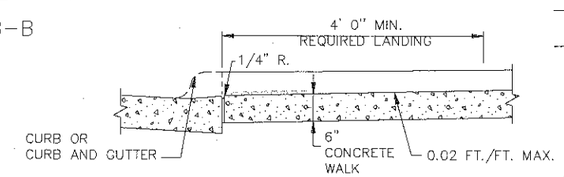

SECTION C–C

PARALLEL/DEPRESSED CORNER

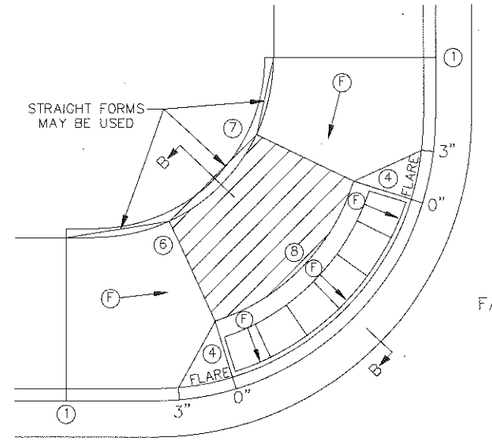

FAN 10

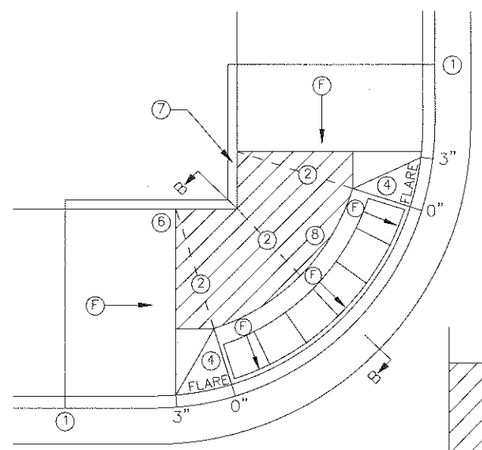

MODIFIED FAN 10

USED WHEN RIGHT–OF–WAY IS CONSTRAINED

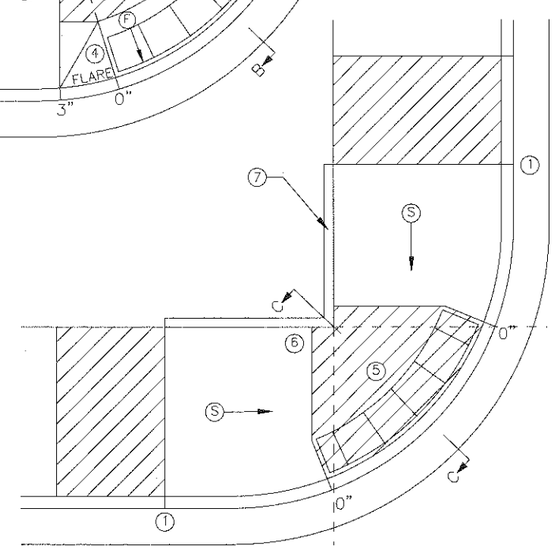

DEPRESSED CORNER

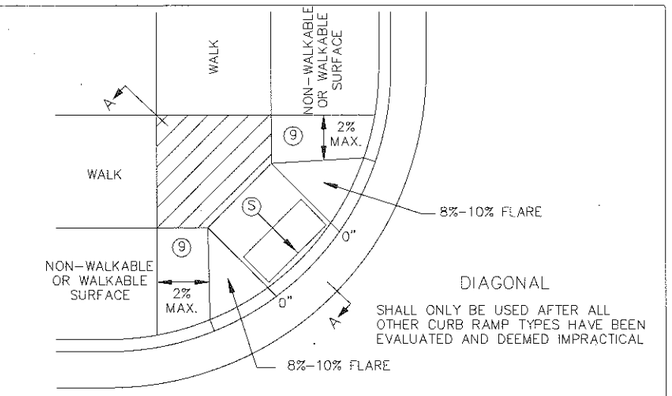

DIAGONAL

SHALL ONLY BE USED AFTER ALL OTHER CURB RAMP TYPES HAVE BEEN EVALUATED AND DEEMED IMPRACTICAL

NOTES:

LANDINGS SHALL BE LOCATED ANYWHERE THE PEDESTRIAN ACCESS ROUTE (PAR) CHANGES DIRECTION, AT THE TOP OF RAMPS THAT HAVE RUNNING SLOPES GREATER THAN 5.0%, AND IF THE APPROACHING WALK IS INVERSE GRADE GREATER THAN 2%.

INITIAL CURB RAMP LANDINGS SHALL BE CONSTRUCTED WITHIN 15' FROM THE BACK OF CURB, WITH 6' FROM THE BACK OF CURB BEING THE PREFERRED DISTANCE, ONLY APPLICABLE WHEN THE INITIAL RAMP RUNNING SLOPE IS OVER 5.0%.

SECONDARY CURB RAMP LANDINGS ARE REQUIRED FOR EVERY 30" OF VERTICAL RISE WHEN THE LONGITUDINAL RUNNING SLOPE IS GREATER THAN 5.0%.

CONTRACTION JOINTS SHALL BE CONSTRUCTED ALONG ALL GRADE BREAKS WITHIN THE PAR. 1/4" DEEP VISUAL JOINTS SHALL BE USED AT THE TOPS OF CONCRETE FLARES ADJACENT TO WALKABLE SURFACES.

ALL GRADE BREAKS WITHIN THE PAR SHALL BE PERPENDICULAR TO THE PATH OF TRAVEL. THUS BOTH SIDES OF A SLOPED WALKING SURFACE MUST BE EQUAL LENGTH. EXCEPT AS STATED IN (6) BELOW.

TO ENSURE INITIAL RAMPS AND INITIAL LANDINGS ARE PROPERLY CONSTRUCTED, LANDINGS SHALL BE CAST SEPARATELY. FOLLOW SIDEWALK REINFORCEMENT DETAILS ON SHEET 6 AND THE ADA SPECIAL PROVISIONS – PROSECUTION OF WORK (ADA).

TOP OF CURB SHALL MATCH PROPOSED ADJACENT WALK GRADE.

WHEN THE BOULEVARD IS 4' WIDE OR LESS, THE TOP OF CURB TAPER SHALL MATCH THE RAMP SLOPES TO REDUCE NEGATIVE BOULEVARD SLOPES FROM THE TOP BACK OF CURB TO THE PAR.

ALL RAMP TYPES SHOULD HAVE A MINIMUM 3' LONG RAMP LENGTH.

4' MINIMUM WIDTH OF DETECTABLE WARNING IS REQUIRED FOR ALL RAMPS. DETECTABLE WARNINGS SHALL CONTINUOUSLY EXTEND FOR A MIN. OF 24" IN THE PATH OF TRAVEL. DETECTABLE WARNING TO COVER ENTIRE WIDTH OF SHARED–USE PATHS AND THE ENTIRE PAR WIDTH OF THE WALK. DETECTABLE WARNING SHOULD BE 6" LESS THAN THE PAR/TRAIL WIDTH. ARC LENGTH OF RADIAL DETECTABLE WARNINGS SHOULD NOT BE GREATER THAN 20 FEET.

RECTANGULAR DETECTABLE WARNINGS SHALL BE SETBACK 3" FROM THE BACK OF CURB. RADIAL DETECTABLE WARNINGS SHALL BE SETBACK 3" MINIMUM TO 6" MAXIMUM FROM THE BACK OF CURB.

(1) MATCH FULL HEIGHT CURB.
(2) 4' MINIMUM DEPTH LANDING REQUIRED ACROSS TOP OF RAMP.
(3) 3" HIGH CURB WHEN USING A 3' LONG RAMP, 4" HIGH CURB WHEN USING A 4' LONG RAMP.
(4) SEE SHEET 4 OF 6, TYPICAL SIDE TREATMENT OPTIONS, FOR DETAILS ON FLARES AND RETURNED CURBS, WHEN INITIAL LANDING IS AT FULL CURB HEIGHT.
(5) DETECTABLE WARNINGS MAY BE PART OF THE 4' X 4' MIN. LANDING AREA IF IT IS NOT FEASIBLE TO CONSTRUCT THE LANDING OUTSIDE OF THE DETECTABLE WARNING AREA.
(6) THE GRADE BREAK SHALL BE PERPENDICULAR TO THE BACK OF WALK. THIS WILL ENSURE THAT THE GRADE BREAK IS PERPENDICULAR TO THE DIRECTION OF TRAVEL. (TYPICAL FOR ALL)
(7) WHEN ADJACENT TO GRASS, GRADING SHALL ALWAYS BE USED WHEN FEASIBLE. V CURB, IF USED, SHALL BE PLACED OUTSIDE THE SIDEWALK LIMITS WHEN RIGHT OF WAY ALLOWS. WHEN ADJACENT TO PARKING LOTS, CONCRETE OR BITUMINOUS TAPERS SHOULD BE USED OVER V CURB TO REDUCE TRIPPING HAZARDS AND FACILITATE SNOW & ICE REMOVAL.
(8) A 7' MIN TOP RADIUS GRADE BREAK REQUIRED TO BE CONSTRUCTIBLE.
(9) PAVE FULL WALK WIDTH.
(10) "S" SLOPES ON FANS SHALL ONLY BE USED WHEN ALL OTHER FEASIBLE OPTIONS HAVE BEEN EVALUATED AND DEEMED IMPRACTICAL.

LEGEND

THESE LONGITUDINAL SLOPE RANGES SHALL BE THE STARTING POINT. IF SITE CONDITIONS WARRANT, LONGITUDINAL SLOPES UP TO 8.3% OR FLATTER ARE ALLOWED.

(S) INDICATES PEDESTRIAN RAMP – SLOPE SHALL BE BETWEEN 5.0% MINIMUM AND 8.3% MAXIMUM IN THE DIRECTION SHOWN AND THE CROSS SLOPE SHALL NOT EXCEED 2.0%.

(F) INDICATES PEDESTRIAN RAMP – SLOPE SHALL BE GREATER THAN 2.0% AND LESS THAN 5.0% IN THE DIRECTION SHOWN AND CROSS SLOPE SHALL NOT EXCEED 2.0%.

LANDING AREA – 4' X 4' MIN. (5' X 5' MIN. PREFERRED) DIMENSIONS AND MAX 2.0% SLOPE IN ALL DIRECTIONS. LANDING SHALL BE FULL WIDTH OF INCOMING PARS.

X" CURB HEIGHT

REVISION:

APPROVED: JANUARY 23, 2017

OPERATIONS ENGINEER

MINNESOTA DEPARTMENT OF TRANSPORTATION

STATE DESIGN ENGINEER

REVISED:

APPROVED: 1–23–2017

PEDESTRIAN CURB RAMP DETAILS

STANDARD PLAN 5–297.250 | 1 OF 6

\\Tool\cad\streets\streets\projects\current\Arlington St.– Mill overlay\DWG\ARLINGTON–details.dwg Apr 24, 2019 – 8:23am

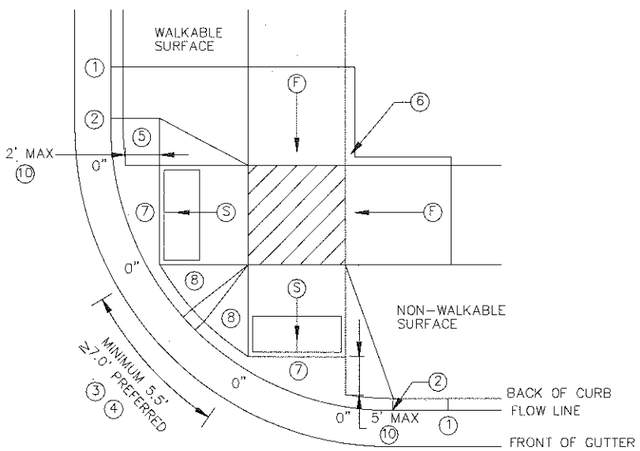

COMBINED DIRECTIONAL ⑨

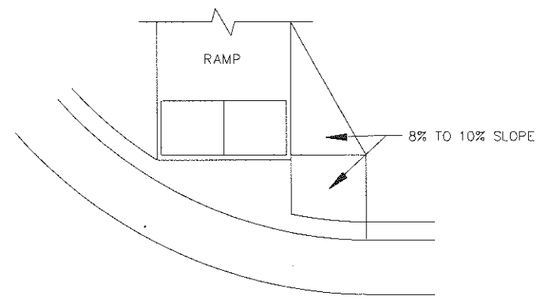

DIRECTIONAL RAMP WALKABLE FLARE

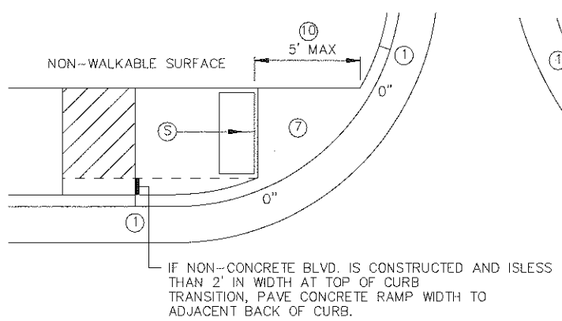

STANDARD ONE-WAY DIRECTIONAL ⑨

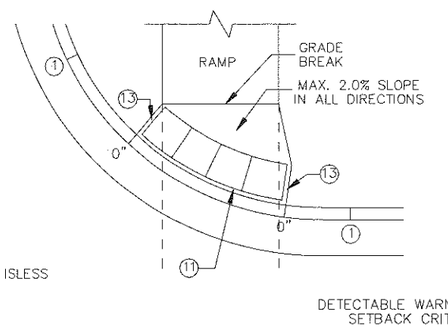

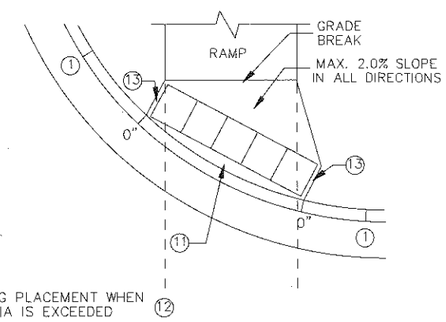

ONE-WAY DIRECTIONAL WITH DETECTABLE WARNING AT BACK OF CURB

NOTES:

LANDINGS SHALL BE LOCATED ANYWHERE THE PEDESTRIAN ACCESS ROUTE (PAR) CHANGES DIRECTION, AT THE TOP OF RAMPS THAT HAVE RUNNING SLOPES GREATER THAN 5.0%, AND IF THE APPROACHING WALK IS INVERSE GRADE.

INITIAL CURB RAMP LANDINGS SHALL BE CONSTRUCTED WITHIN 15' FROM THE BACK OF CURB, WITH 6' FROM THE BACK OF CURB BEING THE PREFERRED DISTANCE, ONLY APPLICABLE WHEN THE INITIAL RAMP RUNNING SLOPE IS OVER 5.0%.

SECONDARY CURB RAMP LANDINGS ARE REQUIRED FOR EVERY 30" OF VERTICAL RISE WHEN THE LONGITUDINAL SLOPE IS GREATER THAN 5.0%.

CONTRACTION JOINTS SHALL BE CONSTRUCTED ALONG ALL GRADE BREAKS WITHIN THE PAR. 1/4" DEEP VISUAL JOINTS SHALL BE USED AT THE TOP GRADE BREAK OF CONCRETE FLARES ADJACENT TO WALKABLE SURFACES.

ALL GRADE BREAKS WITHIN THE PAR SHALL BE PERPENDICULAR TO THE PATH OF TRAVEL. THUS BOTH SIDES OF A SLOPED WALKING SURFACE MUST BE EQUAL LENGTH.

TO ENSURE INITIAL RAMPS AND INITIAL LANDINGS ARE PROPERLY CONSTRUCTED, LANDINGS SHALL BE CAST SEPARATELY. FOLLOW SIDEWALK REINFORCEMENT DETAILS ON SHEET 6 AND THE ADA SPECIAL PROVISION (PROSECUTION OF WORK).

TOP OF CURB SHALL MATCH PROPOSED ADJACENT WALK GRADE.

WHEN THE BOULEVARD IS 4' WIDE OR LESS, THE TOP OF CURB TAPER SHALL MATCH THE RAMP SLOPES TO REDUCE NEGATIVE BOULEVARD SLOPES FROM THE TOP BACK OF CURB TO THE PAR.

ALL RAMP TYPES SHOULD HAVE A MINIMUM 3' LONG RAMP LENGTH.

4' MINIMUM WIDTH OF DETECTABLE WARNING IS REQUIRED FOR ALL RAMPS. DETECTABLE WARNINGS SHALL CONTINUOUSLY EXTEND FOR A MIN. OF 24" IN THE PATH OF TRAVEL. DETECTABLE WARNING TO COVER ENTIRE WIDTH OF SHARED-USE PATH AND THE ENTIRE PAR WIDTH OF THE WALK. DETECTABLE WARNING SHOULD BE 6" LESS THAN THE PAR/PATH WIDTH. ARC LENGTH OF RADIAL DETECTABLE WARNINGS SHOULD NOT BE GREATER THAN 20 FEET.

RADIAL DETECTABLE WARNINGS SHALL BE SETBACK 3" MINIMUM TO 6" MAXIMUM FROM THE BACK OF CURB. SEE NOTES ⑩ & ⑪ FOR INFORMATION REGARDING RECTANGULAR DETECTABLE WARNING PLACEMENT.

① MATCH FULL CURB HEIGHT.

② 3" HIGH CURB WHEN USING A 3' LONG RAMP
4" HIGH CURB WHEN USING A 4' LONG RAMP.

③ 3" MINIMUM CURB HEIGHT (5.5' MIN. DISTANCE REQUIRED BETWEEN DOMES)
4" PREFERRED (7' MIN. DISTANCE REQUIRED BETWEEN DOMES).

④ THE "BUMP" IN BETWEEN THE RAMPS SHOULD NOT BE IN THE PATH OF TRAVEL FOR COMBINED DIRECTIONAL RAMPS. IF THIS OCCURS MODIFY THE RAMP LOCATION OR SWITCH RAMP TO A FAN/DEPRESSED CORNER.

⑤ WHEN USING CONCRETE PAVED FLARES ON THE OUTSIDE OF DIRECTIONAL RAMPS, AND ADJACENT TO A WALKABLE SURFACE, DIRECTIONAL RAMP FLARES SHOULD BE USED. SEE THE DETAIL ON THIS SHEET.

⑥ GRADING SHALL ALWAYS BE USED WHEN FEASIBLE. V CURB, IF USED, SHALL BE PLACED OUTSIDE THE SIDEWALK LIMITS WHEN RIGHT OF WAY ALLOWS. WHEN ADJACENT TO PARKING LOTS, CONCRETE OR BITUMINOUS TAPERS SHOULD BE USED OVER V CURB TO REDUCE TRIPPING HAZARDS AND FACILITATE SNOW & ICE REMOVAL.

⑦ MAX. 2.0% SLOPE IN ALL DIRECTIONS IN FRONT OF GRADE BREAK AND DRAIN TO FLOW LINE. SHALL BE CONSTRUCTED INTEGRAL WITH CURB AND GUTTER.

⑧ 8% TO 10% WALKABLE FLARE.

⑨ PLACE DOMES AT THE BACK OF CURB WHEN ALLOWABLE SETBACK CRITERIA IS EXCEEDED.

⑩ FRONT EDGE OF DETECTABLE WARNING SHALL BE SET BACK 2' MAXIMUM WHEN ADJACENT TO WALKABLE SURFACE, AND 5' MAXIMUM WHEN ADJACENT TO NON-WALKABLE SURFACE WITH ONE CORNER SET 3" FROM BACK OF CURB. A WALKABLE SURFACE IS DEFINED AS A PAVED SURFACE ADJACENT TO A CURB RAMP WITHOUT RAISED OBSTACLES THAT COULD MISTAKENLY BE TRAVERSED BY A USER WHO IS VISUALLY IMPAIRED.

⑪ RECTANGULAR DETECTABLE WARNINGS MAY BE SETBACK UP TO 9" FROM THE BACK OF CURB WITH CORNERS SET 3" FROM BACK OF CURB. IF 9" SETBACK IS EXCEEDED USE RADIAL DETECTABLE WARNINGS.

⑫ FOR DIRECTIONAL RAMPS WITH THE DETECTABLE WARNINGS PLACED AT THE BACK OF CURB, THE DETECTABLE WARNINGS SHALL COVER THE ENTIRE WIDTH OF THE WALK/PATH. THIS ENSURES A DETECTABLE EDGE AND HELPS ELIMINATE THE CURB TAPER OBSTRUCTING THE PATH OF PEDESTRIAN TRAVEL.

⑬ THE CONCRETE WALK SHALL BE FORMED AND CONSTRUCTED PERPENDICULAR TO THE BACK OF CURB. MAINTAIN 3" BETWEEN EDGE OF DOMES AND EDGE OF CONCRETE.

⑭ TO BE USED FOR ALL DIRECTIONAL RAMPS, EXCEPT WHERE DOMES ARE PLACED ALONG THE BACK OF CURB.

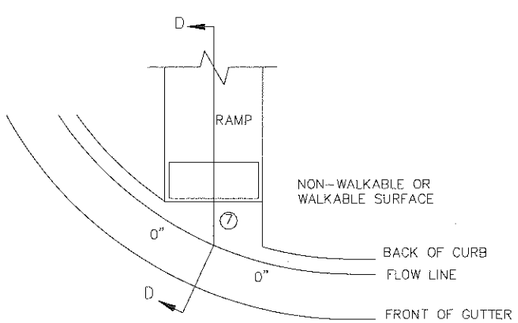

CURB FOR DIRECTIONAL RAMPS ⑭

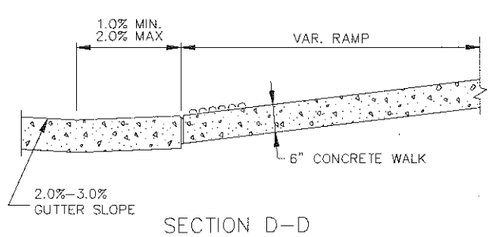

SECTION D-D

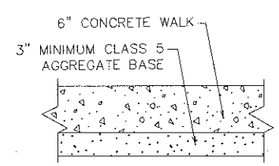

TYPICAL SIDEWALK SECTION WITHIN INTERSECTION CORNER

LEGEND

THESE LONGITUDINAL SLOPE RANGES SHALL BE THE STARTING POINT. IF SITE CONDITIONS WARRANT, LONGITUDINAL SLOPES UP TO 8.3% OR FLATTER ARE ALLOWED.

Ⓢ INDICATES PEDESTRIAN RAMP – SLOPE SHALL BE BETWEEN 5.0% MINIMUM AND 8.3% MAXIMUM IN THE DIRECTION SHOWN AND THE CROSS SLOPE SHALL NOT EXCEED 2.0%.

Ⓕ INDICATES PEDESTRIAN RAMP – SLOPE SHALL BE GREATER THAN 2.0% AND LESS THAN 5.0% IN THE DIRECTION SHOWN AND CROSS SLOPE SHALL NOT EXCEED 2.0%.

LANDING AREA – 4' X 4' MIN. (5' X 5' MIN. PREFERRED) DIMENSIONS AND MAX 2.0% SLOPE IN ALL DIRECTIONS. LANDING SHALL BE FULL WIDTH OF INCOMING PARS.

X" CURB HEIGHT

REVISION:

APPROVED: JANUARY 23, 2017

OPERATIONS ENGINEER

MINNESOTA DEPARTMENT OF TRANSPORTATION

STATE DESIGN ENGINEER

REVISED:

APPROVED: 1-23-2017

PEDESTRIAN CURB RAMP DETAILS

STANDARD PLAN 5-297.250 | 2 OF 6

\\Teal\cad\streets\projects\current\Arlington St.- Mill overlay\DWG\ARLINGTON-details.dwg Apr 24, 2019 - 8:27am

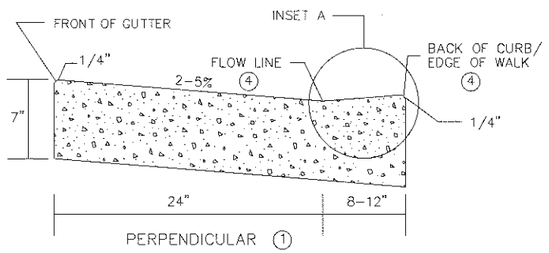

PERPENDICULAR 1

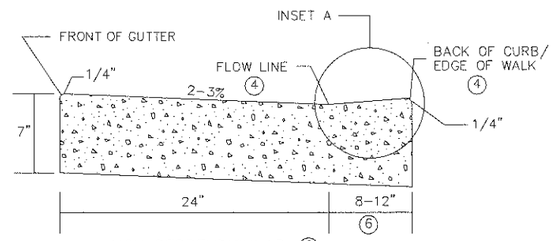

NON PERPENDICULAR 2

PEDESTRIAN ACCESS ROUTE CURB & GUTTER DETAIL

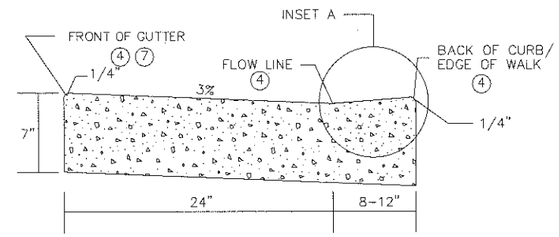

FOR CURB MACHINE PLACEMENT AROUND RADIUS 3
(REGARDLESS OF RAMP TYPE)

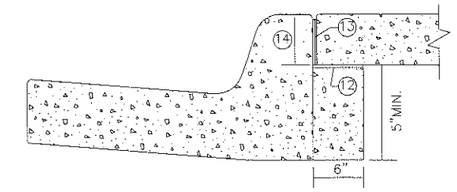

OPTIONAL SILL CURB WHEN SIDEWALK
IS AT BACK OF CURB

CONCRETE SILL TO BE USED ONLY WHEN
SPECIFIED IN THE PLAN.

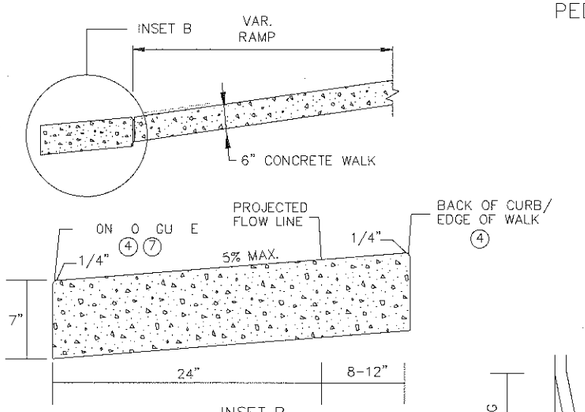

INSET B
OUTFLOW GUTTER 8

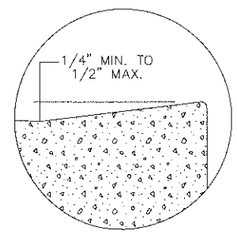

INSET A

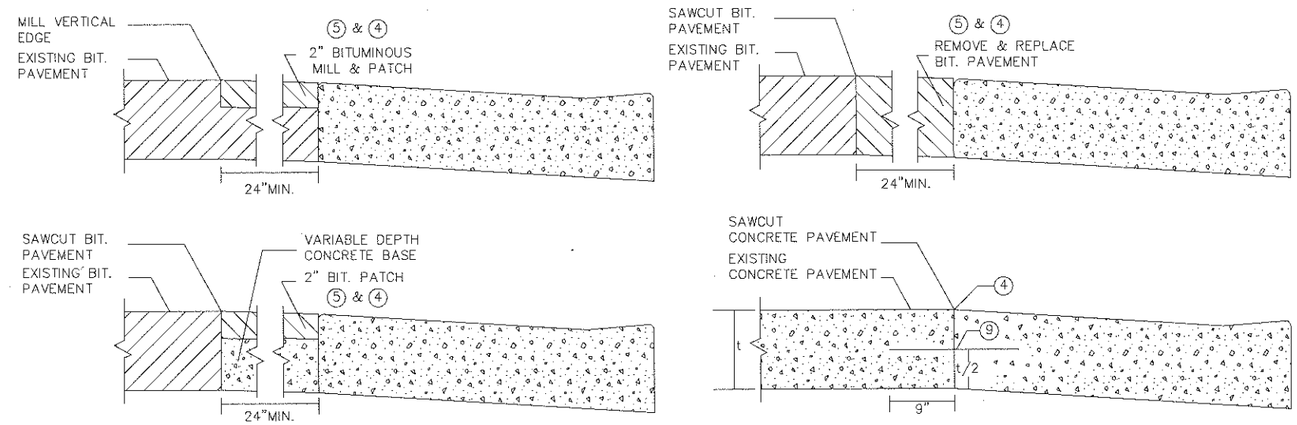

ONLY ALLOWED PER ENGINEER'S APPROVAL

PAVEMENT TREATMENT OPTIONS IN FRONT OF CURB & GUTTER

FOR USE ON CURB RAMP RETROFITS

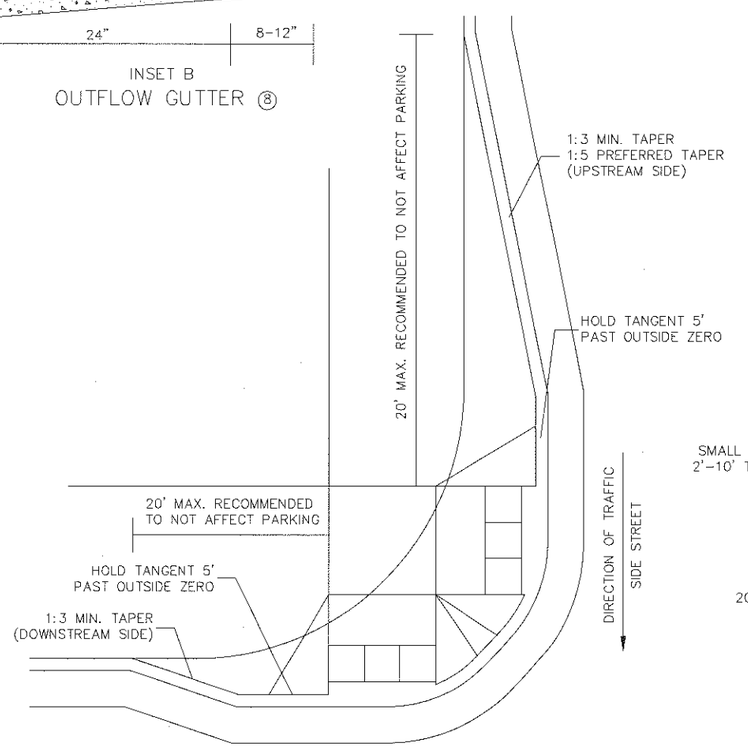

ADA CURB EXTENSION WITH COMPOUND RADIUS (BUMP OUT)11

DIRECTION OF TRAFFIC
MAIN STREET

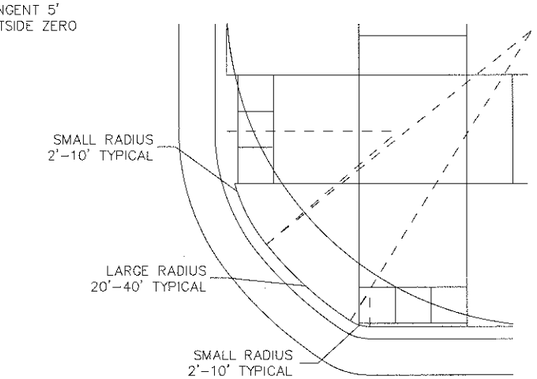

COMBINED DIRECTIONAL 10
(COMPOUND RADIUS)

NOTES:

POSITIVE FLOW LINE DRAINAGE SHALL BE MAINTAINED THROUGH THE PEDESTRIAN ACCESS ROUTE (PAR) AT A 2% MAXIMUM.
NO PONDING SHALL BE PRESENT IN THE PAR.
ANY VERTICAL LIP THAT OCCURS AT THE FLOW LINE SHALL NOT BE GREATER THAN 1/4 INCH.

1. FOR USE AT CURB CUTS WHERE THE PEDESTRIAN'S PATH OF TRAVEL IS ASSUMED PERPENDICULAR TO THE GUTTER FLOW LINE. RAMP TYPES INCLUDE: PERPENDICULAR, TIERED PERPENDICULAR, PARALLEL, AND DIAGONAL RAMPS.
2. FOR USE AT CURB RAMPS WHERE THE PEDESTRIAN'S PATH OF TRAVEL IS ASSUMED NON PERPENDICULAR TO THE GUTTER FLOW LINE. RAMP TYPES INCLUDE: FANS & DEPRESSED CORNERS.
3. BEGIN GUTTER SLOPE TRANSITION 10' OUTSIDE OF ALL CURB RAMPS.
4. THERE SHALL BE NO VERTICAL DISCONTINUITIES GREATER THAN 1/4".
5. ELEVATION CHANGE TAKES PLACE FROM THE EXISTING TO NEW FRONT OF GUTTER. PATCH IS USED TO MATCH THE NEW GUTTER FACE INTO THE EXISTING ROADWAY.
6. VARIABLE WIDTH FOR DIRECTIONAL CURB APPLICATIONS. SEE SHEET 2 FOR DIRECTIONAL CURB SLOPE REQUIREMENTS.
7. TOP FRONT OF GUTTER SHALL BE CONSTRUCTED FLUSH WITH PROPOSED ADJACENT PAVEMENT ELEVATION. TOP 1.5" OF THE GUTTER FACE MUST BE A FORMED EDGE. PAR GUTTER SHALL NOT BE OVERLAID.
8. SHOULD BE USED AT VERTICALLY CONSTRAINED AREAS WHEN AT A DRAINAGE HIGH POINT OR SUPER ELEVATED ROADWAY SEGMENTS.
9. DRILL AND GROUT NO. 4 EPOXY-COATED 18" LONG TIE BARS AT 30" CENTER TO CENTER INTO EXISTING CONCRETE PAVEMENT 1' MINIMUM FROM ALL JOINTS.
10. HELPS PROVIDE TWO SEPARATE RAMPS, REDUCES THE DOME SETBACK LENGTH AND MINIMIZES DIRECTIONAL CURB. THIS RADIUS DESIGN CLOSELY FOLLOWS THE TURNING VEHICLE PATH WHILE OPTIMIZING CURB RAMP LENGTH.
11. CURB EXTENSIONS SHOULD BE USED IN VERTICALLY CONSTRAINED AREAS, USUALLY IN DOWNTOWN ROADWAY SEGMENTS WHERE ON-STREET PARKING IS AVAILABLE. CURB EXTENSIONS SHOULD BE CONSIDERED FOR APS INTERSECTIONS WHERE SPACE IS LIMITED. PUSH BUTTONS MUST MEET APS CRITERIA AS DESCRIBED IN THE PUSH BUTTON LOCATION DETAIL SHEET.
12. PLACE BOND BREAKER BETWEEN WALK AND TOP OF SILL.
13. 1/2" PREFORMED JOINT FILLER PER MNDOT SPEC. 3702.
14. DIMENSION TO BE SAME AS SIDEWALK THICKNESS, 4" MIN.

REVISION:
APPROVED: JANUARY 23, 2017
OPERATIONS ENGINEER

MINNESOTA DEPARTMENT OF TRANSPORTATION
STATE DESIGN ENGINEER
REVISED:
APPROVED: 1-23-2017

PEDESTRIAN CURB RAMP DETAILS

STANDARD PLAN 5-297.250 | 3 OF 6

\\Teal\cad\streets\projects\current\Arlington St. - Mill overlay\DWG\ARLINGTON-details.dwg Apr 24, 2019 - 8:28am

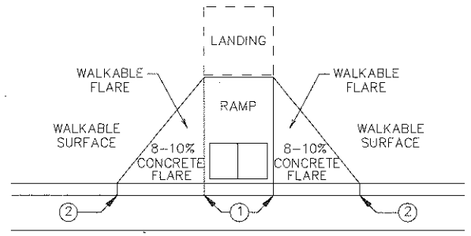

PAVED FLARES
ADJACENT TO WALKABLE SURFACE

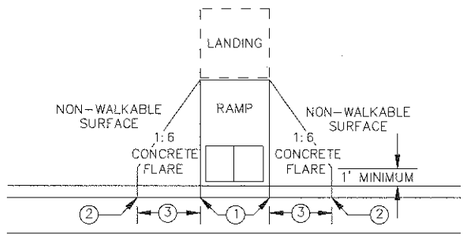

PAVED FLARES
ADJACENT TO NON-WALKABLE SURFACE

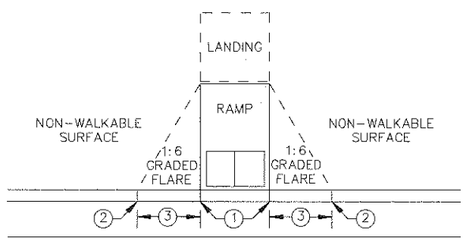

GRADED FLARES

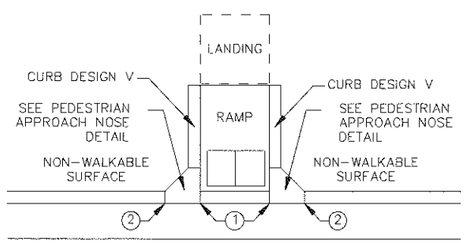

RETURNED CURB (5)

TYPICAL SIDE TREATMENT OPTIONS (4) (11)

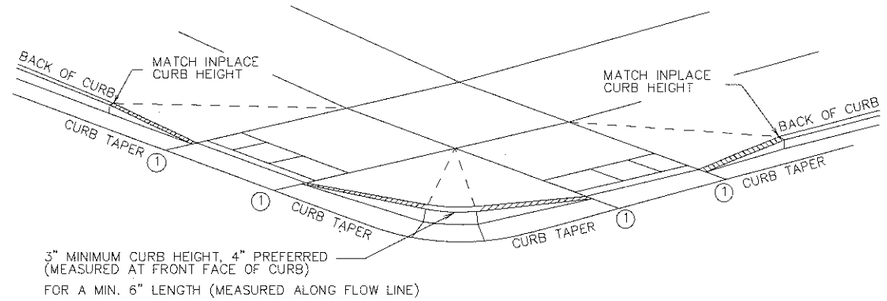

DETECTABLE EDGE WITH (8)
CURB AND GUTTER

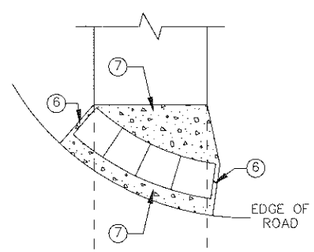

RADIAL DETECTABLE WARNING

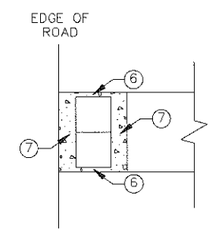

RECTANGULAR DETECTABLE WARNING

DETECTABLE EDGE WITHOUT CURB AND GUTTER

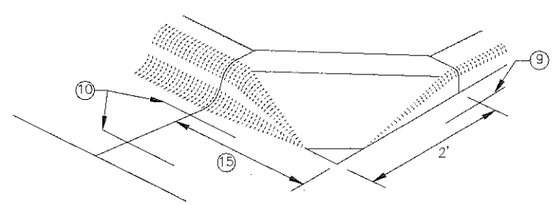

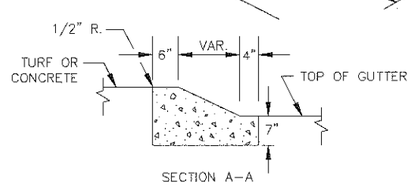

SECTION A-A

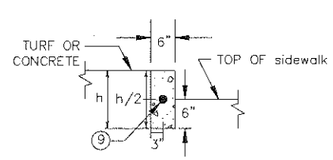

SECTION B-B

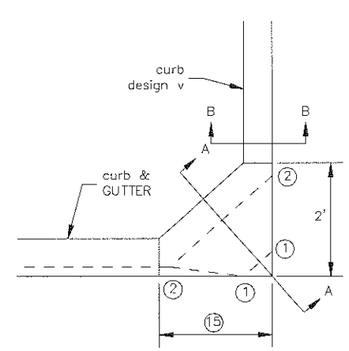

PEDESTRIAN APPROACH
NOSE DETAIL
(FOR RETURNED CURB
SIDE TREATMENT)

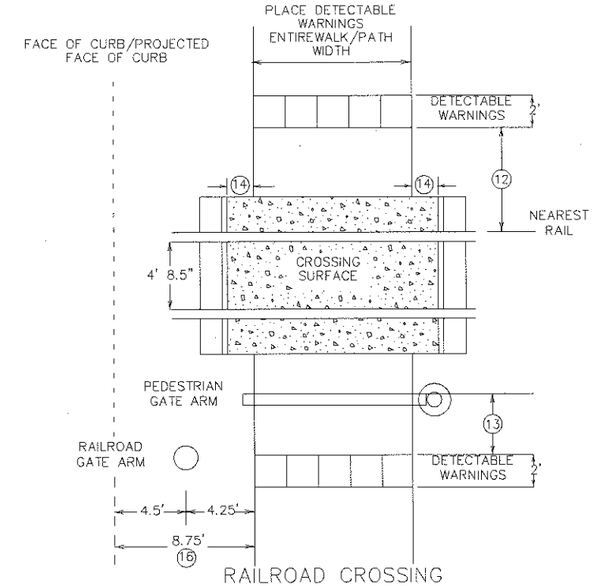

RAILROAD CROSSING
PLAN VIEW

NOTES:

SEE STANDARD PLATE 7038 AND THIS SHEET FOR ADDITIONAL DETAILS ON DETECTABLE WARNING.

A WALKABLE SURFACE IS DEFINED AS A PAVED SURFACE ADJACENT TO A CURB RAMP WITHOUT RAISED OBSTACLES THAT COULD MISTAKENLY BE TRAVERSED BY A USER WHO IS VISUALLY IMPAIRED.

CONCRETE FLARE LENGTHS ADJACENT TO NON-WALKABLE SURFACES SHOULD BE LESS THAN 8' LONG MEASURED ALONG THE RAMPS FROM THE BACK OF CURB.

(1) 0" CURB HEIGHT.

(2) FULL CURB HEIGHT.

(3) 2' FOR 4" HIGH CURB AND 3' FOR 6" HIGH CURB.

(4) SIDE TREATMENTS ARE APPLICABLE TO ALL RAMP TYPES AND SHOULD BE IMPLEMENTED AS NEEDED AS FIELD CONDITIONS DICTATE. THE ENGINEER SHALL DETERMINE THE RAMP SIDE TREATMENTS BASED ON MAINTENANCE OF BOTH ROADWAY AND SIDEWALK, ADJACENT PROPERTY CONSIDERATIONS, AND MITIGATING CONSTRUCTION IMPACTS.

(5) TYPICALLY USED FOR MEDIANS AND ISLANDS.

(6) WHEN NO CONCRETE FLARES ARE PROPOSED, THE CONCRETE WALK SHALL BE FORMED AND CONSTRUCTED PERPENDICULAR TO THE EDGE OF ROADWAY. MAINTAIN 3" MAX. BETWEEN EDGE OF DOMES AND EDGE OF CONCRETE.

(7) IF NO CURB AND GUTTER IS PLACED IN RURAL SECTIONS, DETECTABLE WARNINGS SHALL BE PLACED 1' FROM THE EDGE OF BITUMINOUS ROADWAY AND/OR BITUMINOUS SHARED-USE PATH TO PROVIDE VISUAL CONTRAST.

(8) ALL CONSTRUCTED CURBS MUST HAVE A CONTINUOUS DETECTABLE EDGE FOR THE VISUALLY IMPAIRED. THIS DETECTABLE EDGE REQUIRES DETECTABLE WARNINGS WHEREVER THERE IS ZERO-INCH HIGH CURB. CURB TAPERS ARE CONSIDERED A DETECTABLE EDGE WHEN THE TAPER STARTS WITHIN 3" OF THE EDGE OF THE DETECTABLE WARNINGS AND UNIFORMLY RISES TO A 3-INCH MINIMUM CURB HEIGHT. ANY CURB NOT PART OF A CURB TAPER AND LESS THAN 3 INCHES IN HEIGHT IS NOT CONSIDERED A DETECTABLE EDGE AND THEREFORE IS NOT COMPLIANT WITH ACCESSIBILITY STANDARDS.

(9) DRILL AND GROUT 1 – NO. 4 12" LONG REINFORCEMENT BAR (EPOXY COATED) WITH 3" MIN. COVER. REINFORCEMENT BARS ARE NOT NEEDED IF THE APPROACH NOSE IS POURED INTEGRAL WITH THE V CURB.

(10) DRILL AND GROUT 2 – NO. 4 12" LONG REINFORCEMENT BARS (EPOXY COATED) WITH 3" MIN. COVER. REINFORCEMENT BARS ARE NOT NEEDED IF THE APPROACH NOSE IS POURED INTEGRAL WITH THE CURB AND GUTTER.

(11) SIDE TREATMENT EXAMPLES SHOWN ARE WHEN THE INITIAL LANDING IS APPROXIMATELY LEVEL WITH THE FULL HEIGHT CURB (I.E. 6' LONG RAMP FOR 6" HIGH CURB). WHEN THE INITIAL LANDING IS MORE THAN 1" BELOW FULL HEIGHT CURB REFER TO SHEETS 1 & 2 TO MODIFY THE CURB HEIGHT TAPERS AND MAINTAIN POSITIVE BOULEVARD DRAINAGE.

(12) NEAREST EDGE OF DETECTABLE WARNING SURFACES SHALL BE PLACED 12' MINIMUM TO 15' MAXIMUM FROM THE NEAREST RAIL. FOR SKEWED RAILWAYS IN NO INSTANCE SHALL THE DETECTABLE WARNING BE CLOSER THAN 12' MEASURED PERPENDICULAR TO THE NEAREST RAIL.

(13) WHEN PEDESTRIAN GATES ARE PROVIDED, DETECTABLE WARNING SURFACES SHALL BE PLACED ON THE SIDE OF THE GATES OPPOSITE THE RAIL, 2' FROM THE APPROACHING SIDE OF THE GATE ARM. THIS CRITERIA GOVERNS OVER NOTE (12).

(14) CROSSING SURFACE SHALL EXTEND 2' MINIMUM PAST THE OUTSIDE EDGE OF WALK OR SHARED-USE PATH.

(15) 3' FOR MEDIANS AND SPLITTER ISLANDS. NOSE CAN BE REDUCED TO 2' ON FREE RIGHT ISLANDS.

(16) SIDEWALK TO BE PLACED 8.75' MIN. FROM THE FACE OF CURB/PROJECTED FACE OF CURB. THIS ENSURES MIN. CLEARANCE BETWEEN THE SIDEWALK AND GATE ARM COUNTERWEIGHT SUPPORTS.

REVISION:

APPROVED: JANUARY 23, 2017

OPERATIONS ENGINEER

MINNESOTA DEPARTMENT OF TRANSPORTATION

STATE DESIGN ENGINEER

REVISED:

APPROVED:
1-23-2017

PEDESTRIAN CURB RAMP DETAILS

STANDARD PLAN 5-297.250 | 4 OF 6

\\Tea\cad\streets\projects\current\Arlington St - Mill overlay\DWG\ARLINGTON-details.dwg Apr 24, 2019 - 8:30am

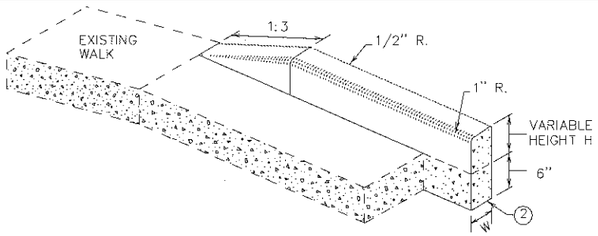

V CURB ADJACENT TO LANDSCAPE

CURB WITHIN SIDEWALK LIMITS

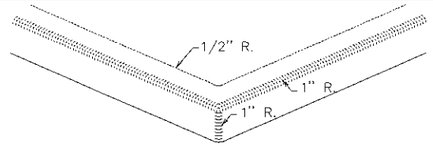

V CURB INTERSECTION

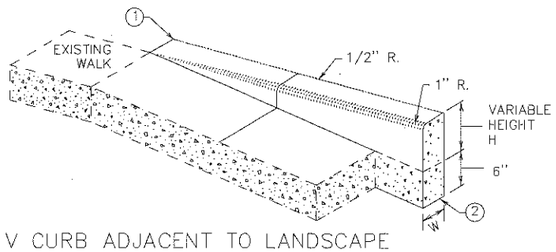

V CURB ADJACENT TO LANDSCAPE

CURB OUTSIDE SIDEWALK LIMITS

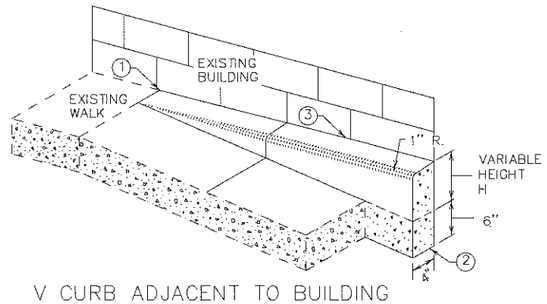

V CURB ADJACENT TO BUILDING OR BARRIER

CONCRETE CURB DESIGN V	
CURB HEIGHT H	CURB WIDTH W
6"	4"
6"	6"

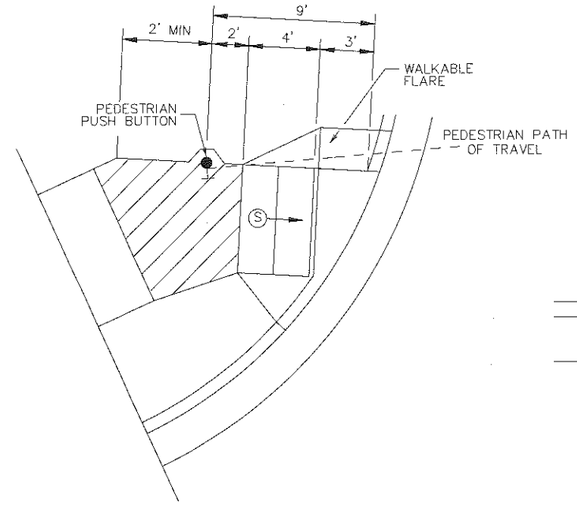

SEMI-DIRECTIONAL RAMP (3,4,9)

3' DOME SETBACK, 4' LONG RAMP AND PUSH BUTTON 9' FROM THE BACK OF CURB

PRIMARILY USED FOR APS APPLICATIONS WHERE THE PAR DOES NOT CONTINUE PAST THE PUSH BUTTON (DEAD-END SIDEWALK)

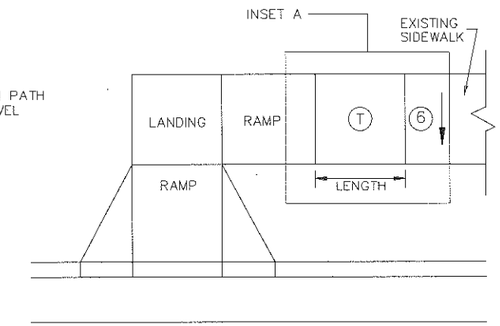

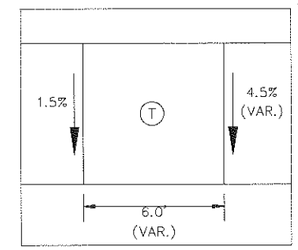

INSET A

TRANSITION PANEL 4 5

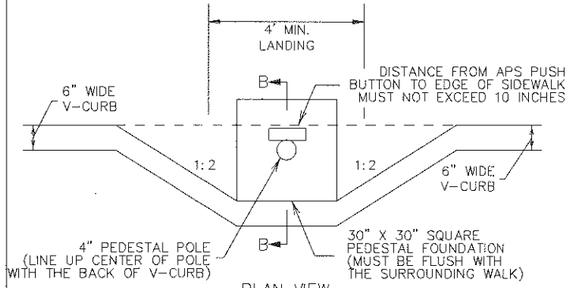

PLAN VIEW

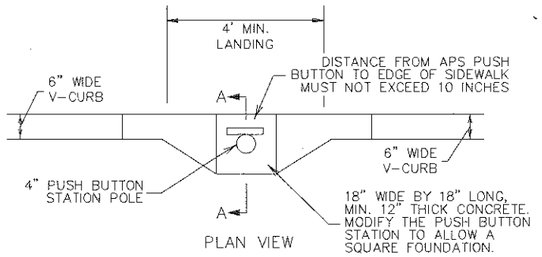

PLAN VIEW

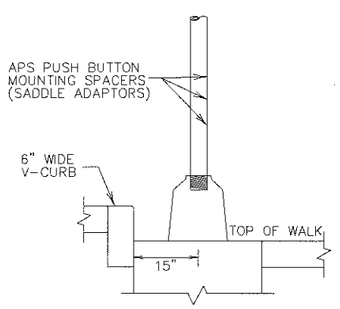

SECTION B-B

SIGNAL PEDESTAL & PUSH BUTTON (V-CURB)

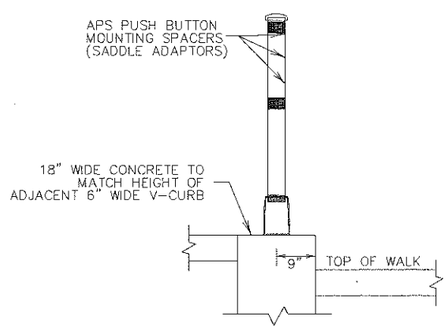

SECTION A-A

PUSH BUTTON STATION (V-CURB)

NOTES:

A WALKABLE FLARE IS AN 8-10% CONCRETE FLARE THAT IS REQUIRED WHEN THE FLARE IS ADJACENT TO A WALKABLE SURFACE, OR WHEN THE PEDESTRIAN PATH OF TRAVEL OF A PUSH BUTTON TRAVERSES THE FLARE.

ALL V CURB CONTRACTION JOINTS SHALL MATCH CONCRETE WALK JOINTS.

WHERE RIGHT-OF-WAY ALLOWS, USE OF V CURB SHOULD BE MINIMIZED. GRADING ADJACENT TURF OR SLOPING ADJACENT PAVEMENT IS PREFERRED.

V CURB SHALL BE PLACED OUTSIDE THE SIDEWALK LIMITS WHEN RIGHT OF WAY ALLOWS.

V CURB NEXT TO BUILDING SHALL BE A 4" WIDTH AND SHALL MATCH PREVIOUS TOP OF SIDEWALK ELEVATIONS.

1. END TAPERS AT TRANSITION SECTION SHALL MATCH INPLACE SIDEWALK GRADES.
2. ALL V CURB SHALL MATCH BOTTOM OF ADJACENT WALK.
3. EDGE BETWEEN NEW V CURB AND INPLACE STRUCTURE SHALL BE SEALED AND BOND BREAKER SHALL BE USED BETWEEN EXISTING STRUCTURE AND PLACED V-CURB.
4. THE MAX. RATE OF CROSS SLOPE TRANSITIONING IS 1' LINEAR FOOT OF SIDEWALK PER HALF PERCENT CROSS SLOPE. WHEN PAR WIDTH IS GREATER THAN 6' OR THE RUNNING SLOPE IS GREATER THAN 5%, DOUBLE THE CALCULATED TRANSITION LENGTH.
5. TRANSITION PANELS ARE TO ONLY BE USED AFTER THE RAMP, OR IF NEEDED, LANDING ARE AT THE FULL CURB HEIGHT (TYPICAL SECTION).
6. EXISTING CROSS SLOPE GREATER THAN 2.0%.

LEGEND

THESE LONGITUDINAL SLOPE RANGES SHALL BE THE STARTING POINT. IF SITE CONDITIONS WARRANT, LONGITUDINAL SLOPES UP TO 8.3% OR FLATTER ARE ALLOWED.

- S — INDICATES PEDESTRIAN RAMP – SLOPE SHALL BE BETWEEN 5.0% MINIMUM AND 8.3% MAXIMUM IN THE DIRECTION SHOWN AND THE CROSS SLOPE SHALL NOT EXCEED 2.0%.
- LANDING AREA – 4' X 4' MIN. (5' X 5' MIN. PREFERRED) DIMENSIONS AND MAX 2.0% SLOPE IN ALL DIRECTIONS. LANDING SHALL BE FULL WIDTH OF INCOMING PARS.
- T — TRANSITION PANEL(S) – TO BE USED FOR TRANSITIONING THE CROSS-SLOPE OF A RAMP TO THE EXISTING WALK CROSS-SLOPE. RATE OF TRANSITION SHOULD BE 0.5% PER 1 LINEAR FOOT OF WALK. SEE THIS SHEET FOR ADDITIONAL INFORMATION.

REVISION:

APPROVED: JANUARY 23, 2017

OPERATIONS ENGINEER

MINNESOTA DEPARTMENT OF TRANSPORTATION

STATE DESIGN ENGINEER

REVISED:

APPROVED: 1-23-2017

PEDESTRIAN CURB RAMP DETAILS

STANDARD PLAN 5-297.250 | 5 OF 6

\\Teal\cad\streets\projects\current\Arlington St - Mill overlay\DWG\ARLINGTON-details.dwg Apr 24, 2019 - 8:33am

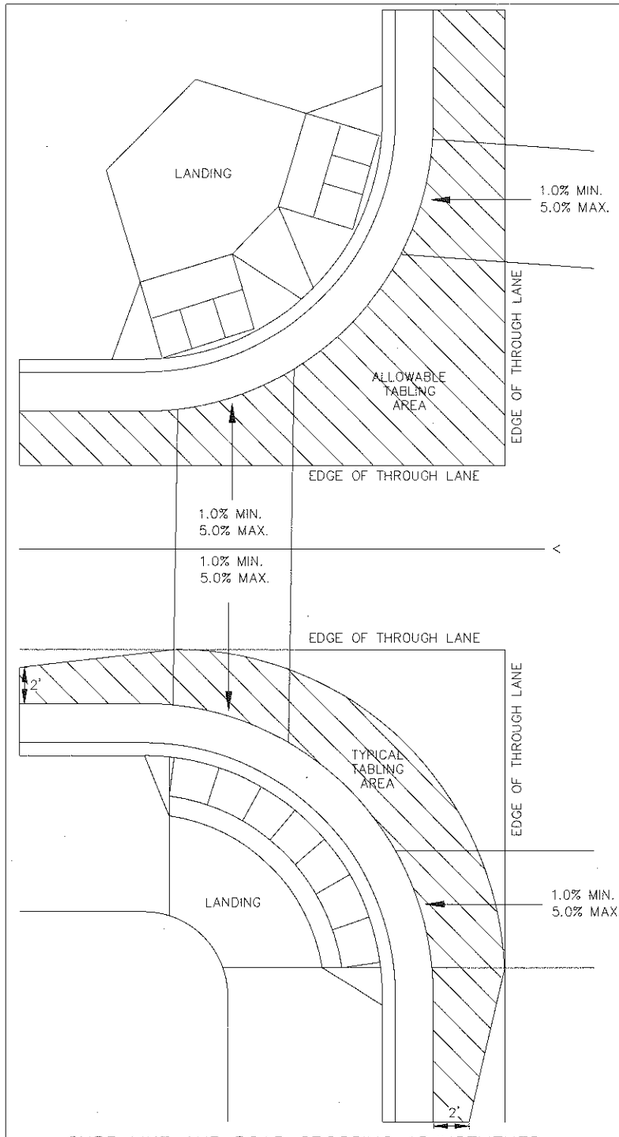

CURB LINE AND ROAD CROSSING ADJUSTMENTS

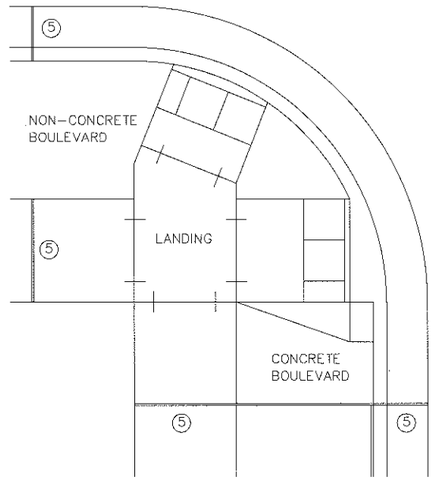

EXPANSION MATERIAL PLACEMENT FOR CONCRETE AND BITUMINOUS ROADWAYS

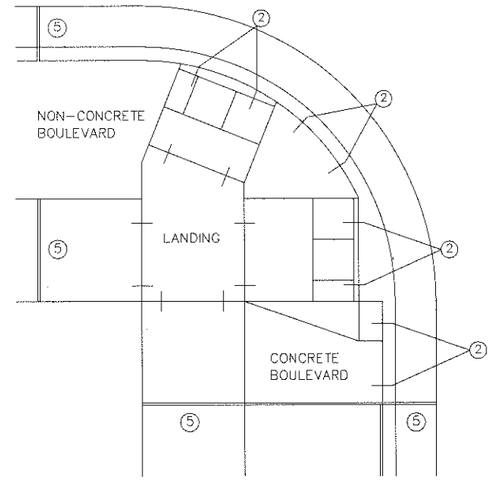

OPTIONAL CURB LINE REINFORCEMENT PLACEMENT ON BITUMINOUS ROADWAYS 4

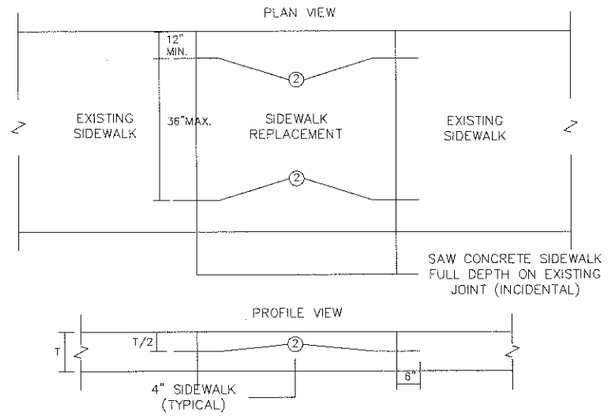

OPTIONAL SIDEWALK REINFORCEMENT

SIDEWALK REINFORCEMENT TO BE USED ONLY WHEN SPECIFIED IN THE PLAN.

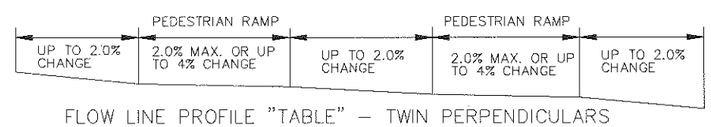

FLOW LINE PROFILE "TABLE" – TWIN PERPENDICULARS

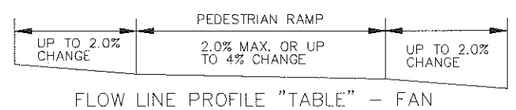

FLOW LINE PROFILE "TABLE" – FAN

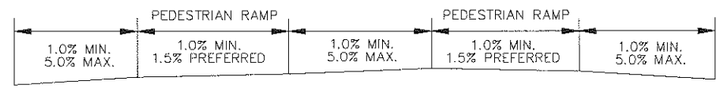

FLOW LINE PROFILE RAISE – TWIN PERPENDICULARS

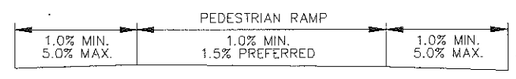

FLOW LINE PROFILE RAISE – FAN

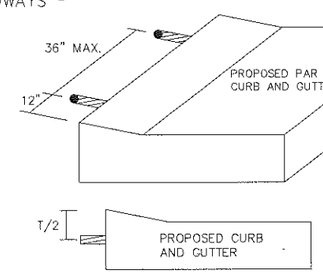

OPTIONAL CURB LINE REINFORCEMENT DETAILS 2 4

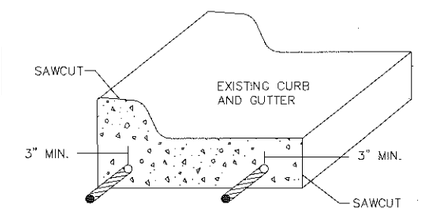

FOR USE ON CURB RAMP RETROFITS

CURB AND GUTTER REINFORCEMENT 3

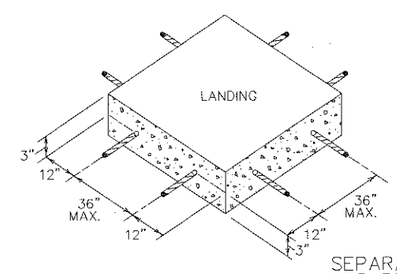

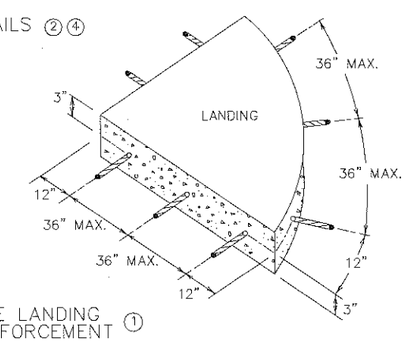

SEPARATE LANDING POUR REINFORCEMENT 1

"TABLING" OF CROSSWALKS MEANS MAINTAINING LESS THAN 2% CROSS SLOPE WITHIN A CROSSWALK, IS REQUIRED WHEN A ROADWAY IS IN A STOP OR YIELD CONDITION AND THE PROJECT SCOPE ALLOWS.

RECONSTRUCTION PROJECTS: ON FULL PAVEMENT REPLACEMENT PROJECTS "TABLING" OF ENTIRE CROSSWALK SHALL OCCUR WHEN FEASIBLE.

MILL & OVERLAY PROJECTS: "TABLING" OF FLOW LINES, IN FRONT OF THE PEDESTRIAN RAMP, IS REQUIRED WHEN THE EXISTING FLOW LINE IS GREATER THAN 2%. WARPING OF THE BITUMINOUS PAVEMENT CAN NOT EXTEND INTO THE THROUGH LANE. TABLE THE FLOW LINE TO 2% OR AS MUCH AS POSSIBLE WHILE ADHERING TO THE FOLLOWING CRITERIA;

1) 1.0% MIN. CROSS-SLOPE OF THE ROAD
2) 5.0% MAX. CROSS-SLOPE OF THE ROAD
3) "TABLE" FLOW LINE UP TO 4% CHANGE FROM EXISTING SLOPE IN FRONT OF PEDESTRIAN RAMP
4) UP TO 2% CHANGE IN FLOW LINE FROM EXISTING SLOPE BEYOND THE PEDESTRIAN CURB RAMP

STAND-ALONE ADA RETROFITS: FOLLOW MILL & OVERLAY CRITERIA ABOVE HOWEVER ALL PAVEMENT WARPING IS DONE WITH BITUMINOUS PATCHING ON BITUMINOUS ROADWAYS AND FULL-DEPTH APRON REPLACEMENT ON CONCRETE ROADWAYS.

RAISING OF CURB LINES SHOULD OCCUR IN VERTICALLY CONSTRAINED AREAS. RAISE THE CURB LINES ENOUGH TO ALLOW COMPLIANT RAMPS OR AS MUCH AS POSSIBLE WHILE ADHERING TO THE FOLLOWING CRITERIA;

1) 1.0% MIN. AND 5.0% MAXIMUM CROSS-SLOPE OF THE ROAD
2) 1.0% MIN. FLOW LINE (ON EITHER SIDE OF PEDESTRIAN RAMP) TO MAINTAIN POSITIVE DRAINAGE
3) 5.0% RECOMMENDED MAX. FLOW LINE
4) LONGITUDINAL THROUGH LANE ROADWAY TAPERS SHOULD BE 1" VERTICAL PER 15' HORIZONTAL

NOTES:

1. TO ENSURE RAMPS AND LANDINGS ARE PROPERLY CONSTRUCTED, ALL INITIAL LANDINGS AT A TOP OF A RAMPED SURFACE (RUNNING SLOPE GREATER THAN 2%) SHALL BE FORMED AND PLACED SEPARATELY IN AN INDEPENDENT CONCRETE POUR. FOLLOW SIDEWALK REINFORCEMENT DETAILS ON THIS SHEET FOR ALL SEPARATELY POURED INITIAL LANDINGS.
2. DRILL AND GROUT NO. 4 12" LONG REINFORCEMENT BARS AT 36" MAXIMUM CENTER TO CENTER (EPOXY COATED). BARS TO BE ADJUSTED TO MATCH RAMP GRADE.
3. DRILL AND GROUT 2 – NO. 4 X 12" LONG REINFORCEMENT BARS (EPOXY COATED). REINFORCEMENT REQUIRED FOR ALL CONSTRUCTION JOINTS WITHIN RADIUS.
4. THIS OPTIONAL CURB LINE REINFORCEMENT DETAIL SHOULD ONLY BE USED ON BITUMINOUS ROADWAYS WHEN SPECIFIED IN THE PLAN.
5. 1/2 IN. PREFORMED JOINT FILLER MATERIAL PER MNDOT SPEC. 3702.

REVISION:

APPROVED: JANUARY 23, 2017

OPERATIONS ENGINEER

MINNESOTA DEPARTMENT OF TRANSPORTATION

STATE DESIGN ENGINEER

REVISED:

APPROVED: 1-23-2017

PEDESTRIAN CURB RAMP DETAILS

STANDARD PLAN 5-297.250 | 6 OF 6

\\Teal\cad\streets\projects\current\Arlington St - Mill overlay\DWG\ARLINGTON-details.dwg Apr 24, 2019 - 8:32am

CONSTRUCT

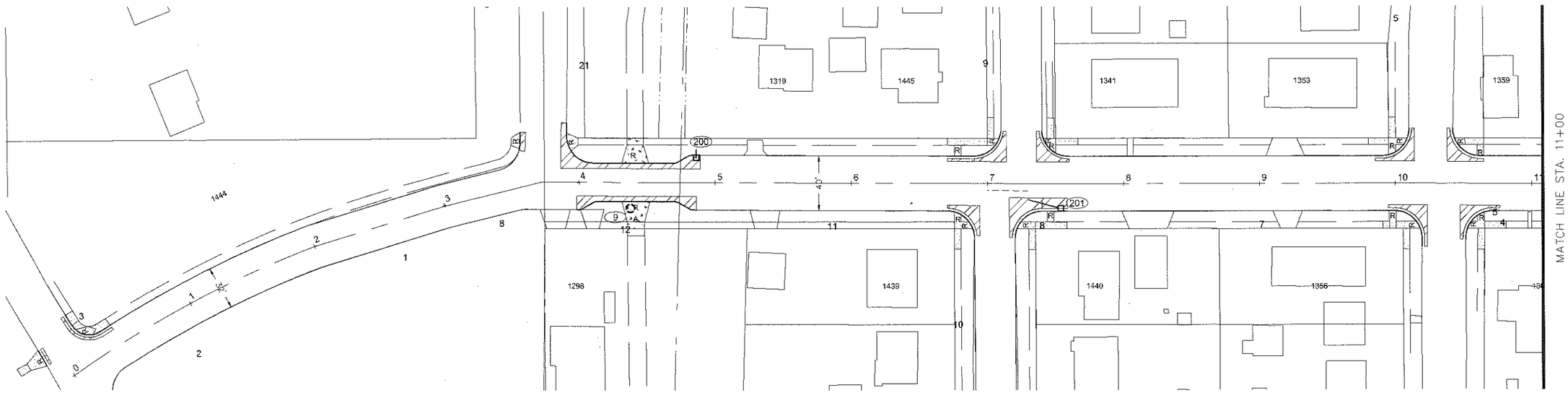

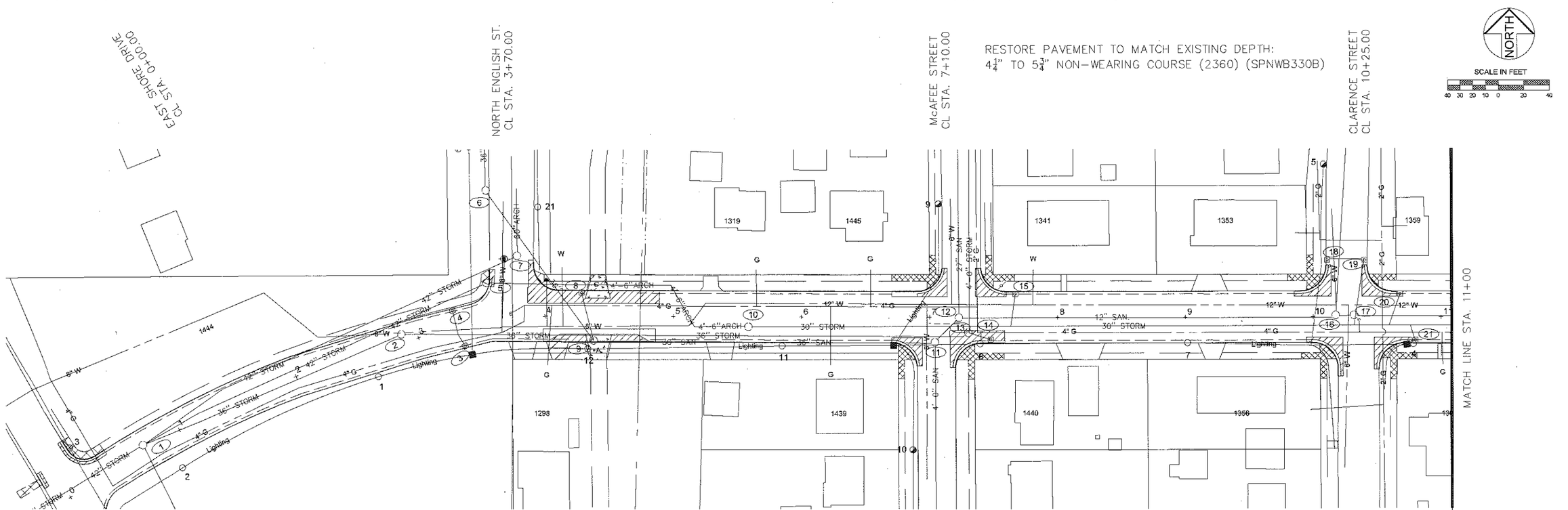

EXISTING AND REMOVAL PLAN

ARLINGTON AVENUE
EAST SHORE DR. TO CLARENCE ST.

SAINT PAUL	DESIGNED	ASO	I HEREBY CERTIFY THAT THIS PLAN WAS PREPARED BY ME OR UNDER MY DIRECT SUPERVISION AND THAT I AM A DULY LICENSED PROFESSIONAL ENGINEER UNDER THE LAWS OF THE STATE OF MINNESOTA	PREPARED BY STREET ENGINEERING DIVISION FOR THE CITY OF ST. PAUL, DEPARTMENT OF PUBLIC WORKS	PROJECT: 19-P-1452	STATE AID PROJECT NUMBER:
	DRAWN	AS		ARLINGTON AVENUE	DRAWER: 12	CAD NAME: PROJECTS/CURRENT/ARLINGTON/DWG
	APPROVED	BRM	Signature: ENGINEER Date: 4/19/2019 Lic. No. 43099		DWG. NO. 1618	DATE: 4/19/2019 SHEET NO. 14 OF 19 SHEETS

Z:\streets\streets\projects\current\Arlington St - Mill overlay\DWG\Arlingtongeomap1.dwg Apr 26, 2019 - 9:49am

CONSTRUCT

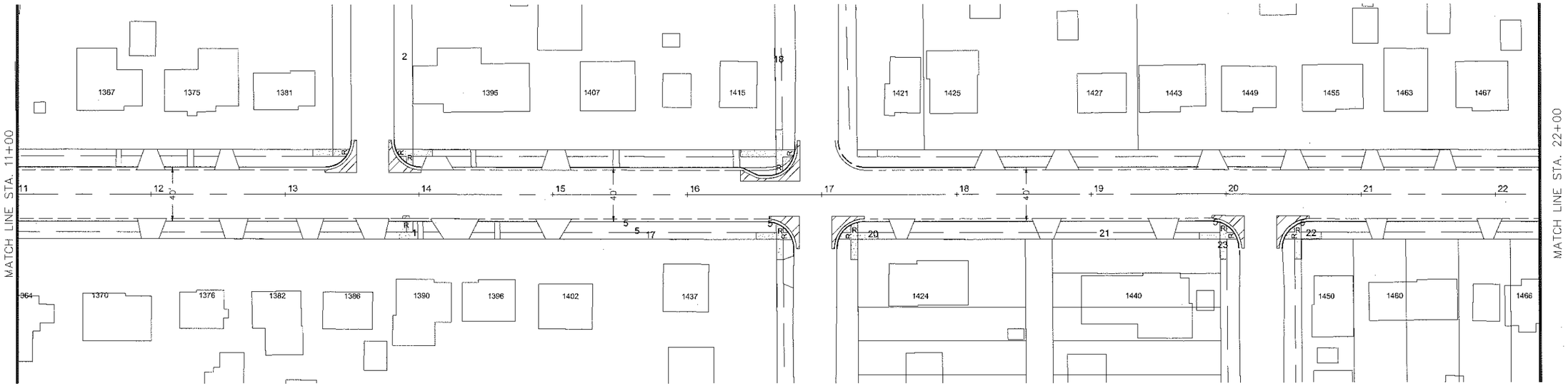

ETNA STREET N.
CL STA. 13+65.71

RESTORE PAVEMENT TO MATCH EXISTING DEPTH
$4\frac{1}{4}$" TO $5\frac{3}{4}$" NON-WEARING COURSE (2360) (SPNWB330B)

BIRMINGHAM STREET
CL STA. 16+96.20

WINCHELL STREET
CL STA. 20+25.41

NORTH

SCALE IN FEET
40 30 20 10 0 20 40

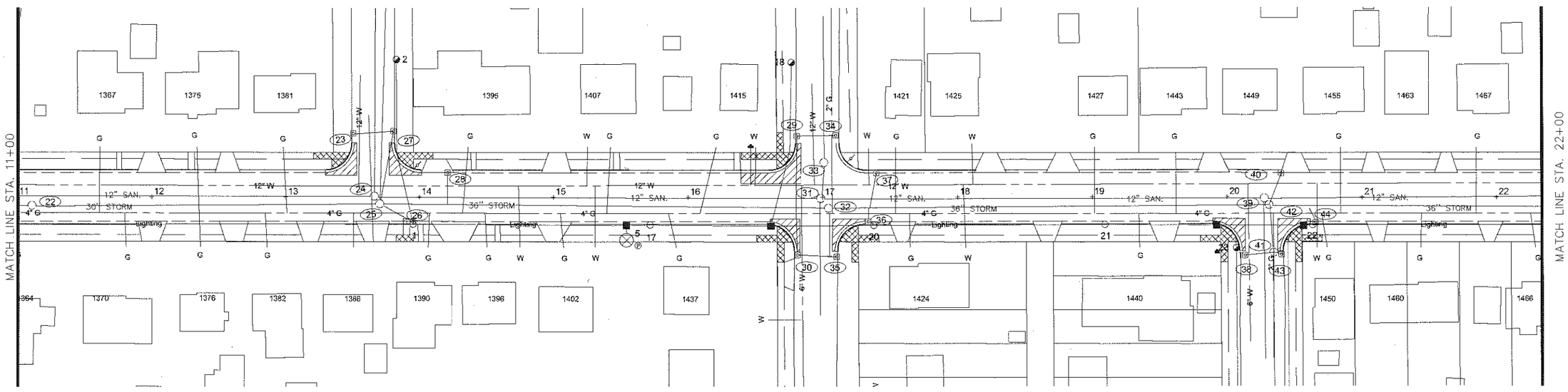

EXISTING AND REMOVAL PLAN

ARLINGTON AVENUE
ETNA ST. TO WINCHELL ST.

SAINT PAUL	DESIGNED	ASO	I HEREBY CERTIFY THAT THIS PLAN WAS PREPARED BY ME OR UNDER MY DIRECT SUPERVISION AND THAT I AM A DULY LICENSED PROFESSIONAL ENGINEER UNDER THE LAWS OF THE STATE OF MINNESOTA	PREPARED BY STREET ENGINEERING DIVISION FOR THE CITY OF ST. PAUL, DEPARTMENT OF PUBLIC WORKS	PROJECT: 19-P-1452	STATE AID PROJECT NUMBER:
	DRAWN	ASO	Signature: Robert K. Mendel ENGINEER Date: 4/19/2019 Lic. No. 43099	ARLINGTON AVENUE	DRAWER: 12	CAD NAME: PROJECTS/CURRENT/ADA IMPROVEMENTS/DWG
	APPROVED	BRM			DWG. NO. 1618	DATE: 4/19/2019 SHEET NO. 15 OF 19 SHEETS

Z:\streets\streets\projects\current\Arlington St- Mill overlay\DWG\ArlingtonBasemap1.dwg Apr 26, 2019 - 9:50am

CONSTRUCT

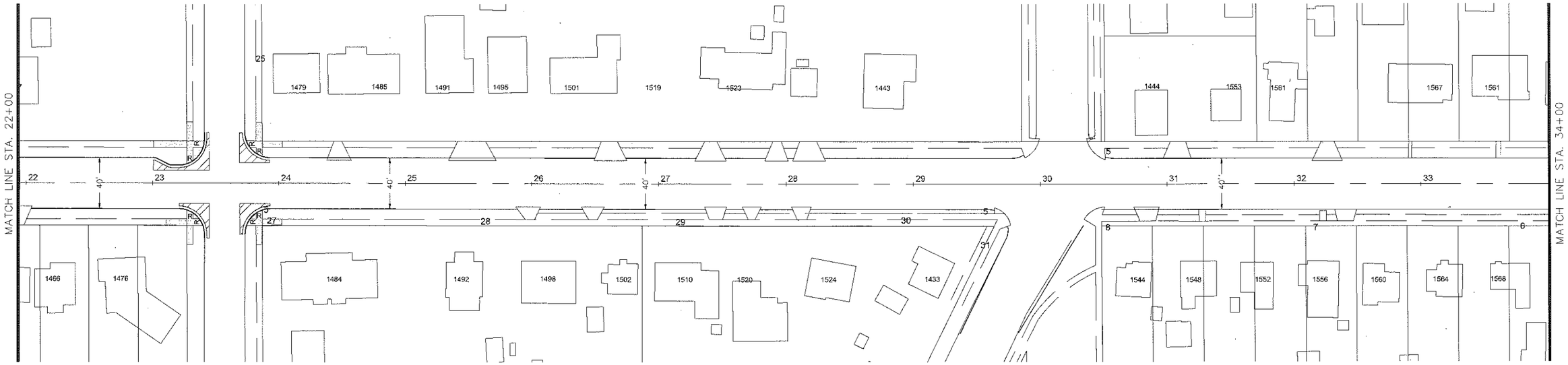

BARCLAY STREET
CL STA. 23+57.44

HAZELWOOD STREET
CL STA. 30+18.36

RESTORE PAVEMENT TO MATCH EXISTING DEPTH
$4\frac{1}{4}$" TO $5\frac{3}{4}$" NON-WEARING COURSE (2360) (SPNWB330B)

NORTH

SCALE IN FEET
40 30 20 10 0 20 40

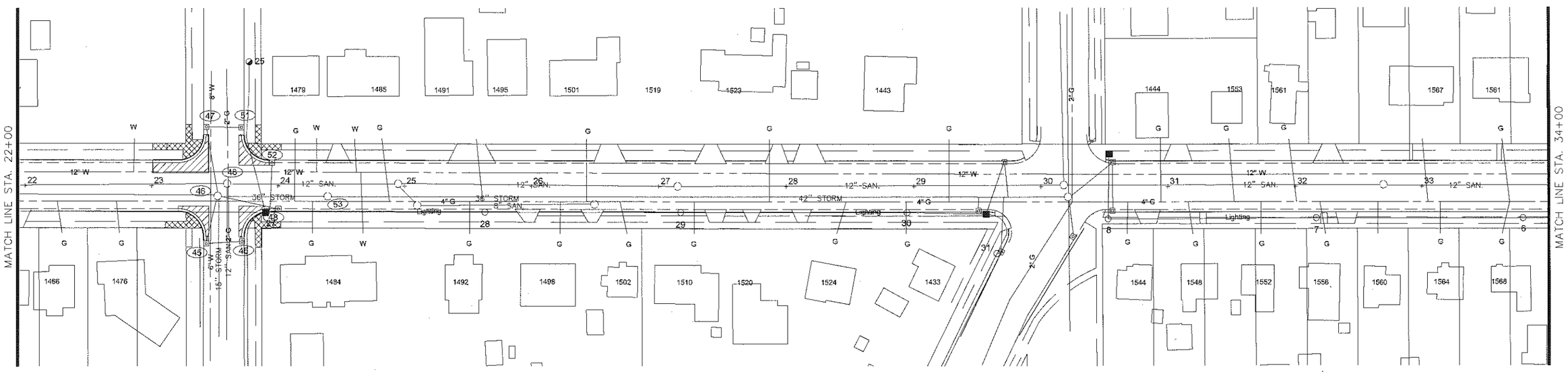

EXISTING AND REMOVAL PLAN

ARLINGTON AVENUE
BARCLAY ST. TO HAZELWOOD ST.

SAINT PAUL	DESIGNED	ASO	I HEREBY CERTIFY THAT THIS PLAN WAS PREPARED BY ME OR UNDER MY DIRECT SUPERVISION AND THAT I AM A DULY LICENSED PROFESSIONAL ENGINEER UNDER THE LAWS OF THE STATE OF MINNESOTA	PREPARED BY STREET ENGINEERING DIVISION FOR THE CITY OF ST. PAUL, DEPARTMENT OF PUBLIC WORKS	PROJECT: 19-P-1452	STATE AID PROJECT NUMBER:
	DRAWN	ASO		ARLINGTON AVENUE	DRAWER: 12	CAD NAME: PROJECTS/CURRENT/ARLINGTON/DWG
	APPROVED	BRM	Signature: ENGINEER Date: 4/19/2019 Lic. No. 43099		DWG. NO. 1618	DATE: 4/19/2019 SHEET NO. 16 OF 19 SHEETS

Z:\streets\projects\current\Arlington St.- Mill overlay\DWG\ArlingtonBasemap1.dwg Apr 26, 2019 - 9:51am

CONSTRUCT

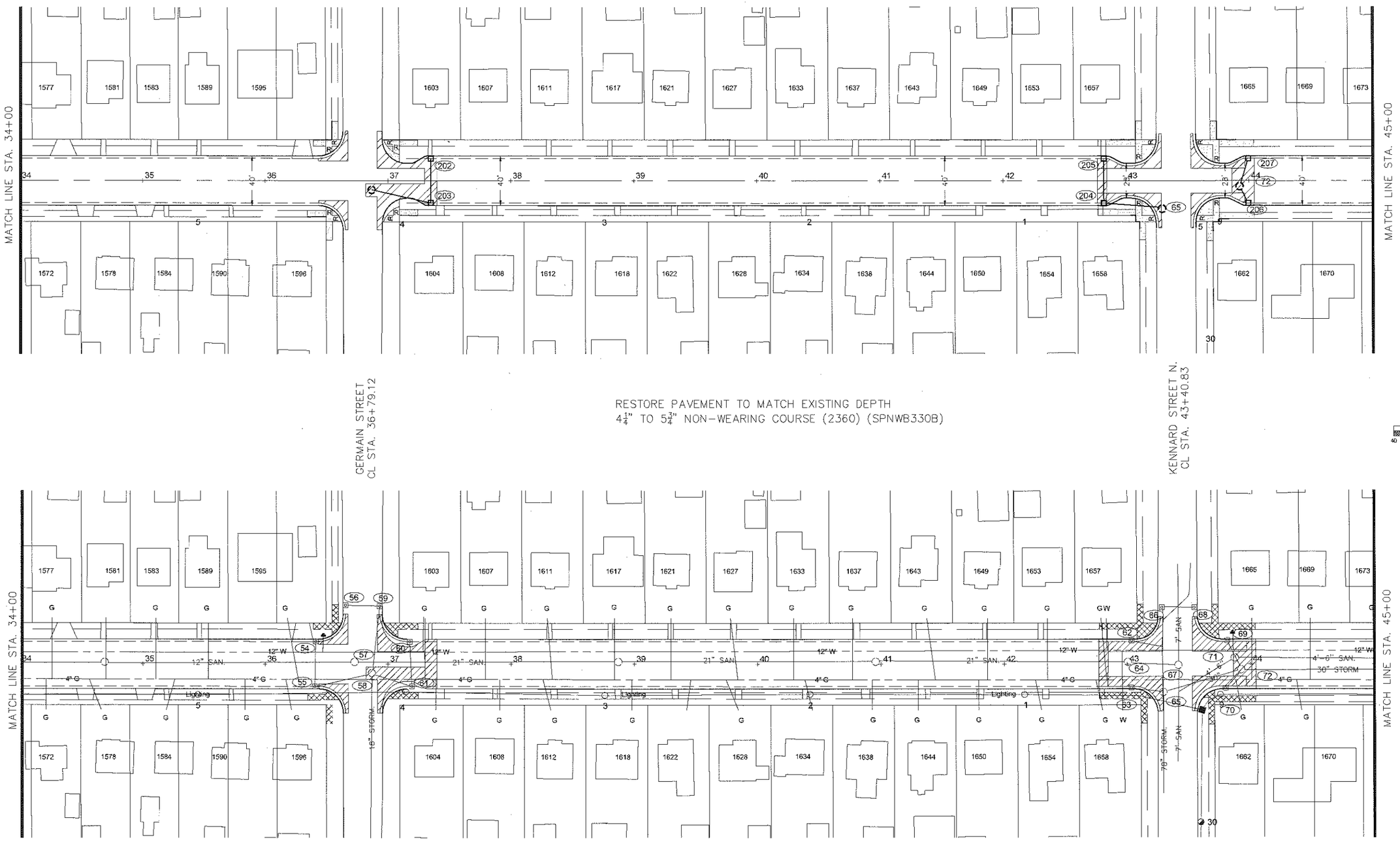

EXISTING AND REMOVAL PLAN

ARLINGTON AVENUE
GERMAIN ST TO KENNARD ST.

SAINT PAUL	DESIGNED	ASO	I HEREBY CERTIFY THAT THIS PLAN WAS PREPARED BY ME OR UNDER MY DIRECT SUPERVISION AND THAT I AM A DULY LICENSED PROFESSIONAL ENGINEER UNDER THE LAWS OF THE STATE OF MINNESOTA	PREPARED BY STREET ENGINEERING DIVISION FOR THE CITY OF ST. PAUL, DEPARTMENT OF PUBLIC WORKS	PROJECT: 19-P-1452	STATE AID PROJECT NUMBER:
	DRAWN	ASO		ARLINGTON AVENUE	DRAWER: 12	CAD NAME: PROJECTS/CURRENT/ARLINGTON/DWG
	APPROVED	BRM	Signature: ENGINEER Date: 4/19/2019 Lic. No. 43099		DWG. NO. 1618	DATE: 4/19/2019 SHEET NO. 17 OF 19 SHEETS

Z:\streets\streets\projects\current\Arlington St.- Mill overlay\DWG\ArlingtonBasemap1.dwg Apr 26, 2019 - 9:51am

CONSTRUCT

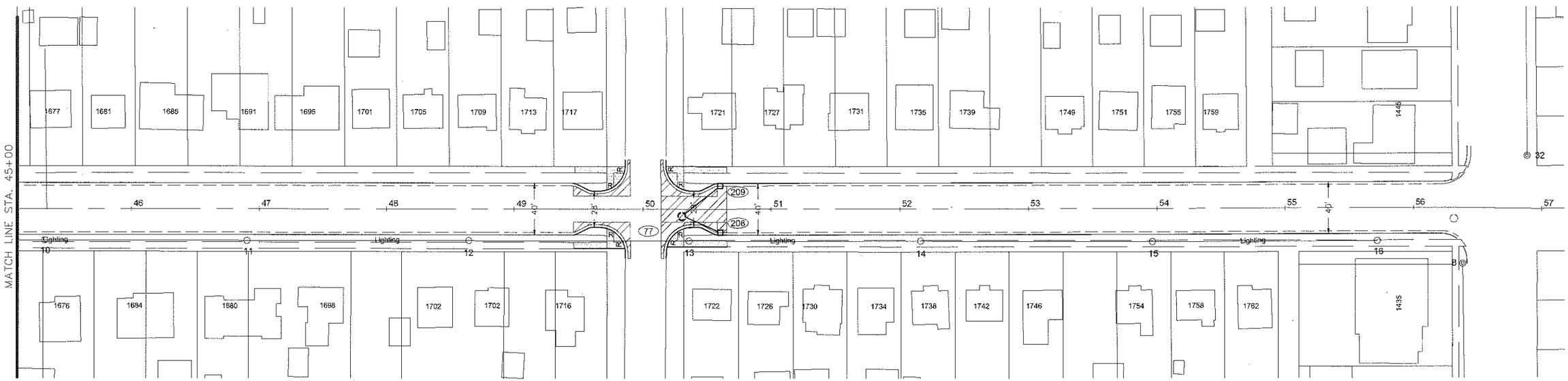

FLANDRAU STREET
CL STA. 50+1.96

RESTORE PAVEMENT TO MATCH EXISTING DEPTH
$4\frac{1}{4}$" TO $5\frac{3}{4}$" NON-WEARING COURSE (2360) (SPNWB330B)

NORTH

SCALE IN FEET
40 30 20 10 0 20 40

WHITEBEAR AVE
CL STA. 56+64.51

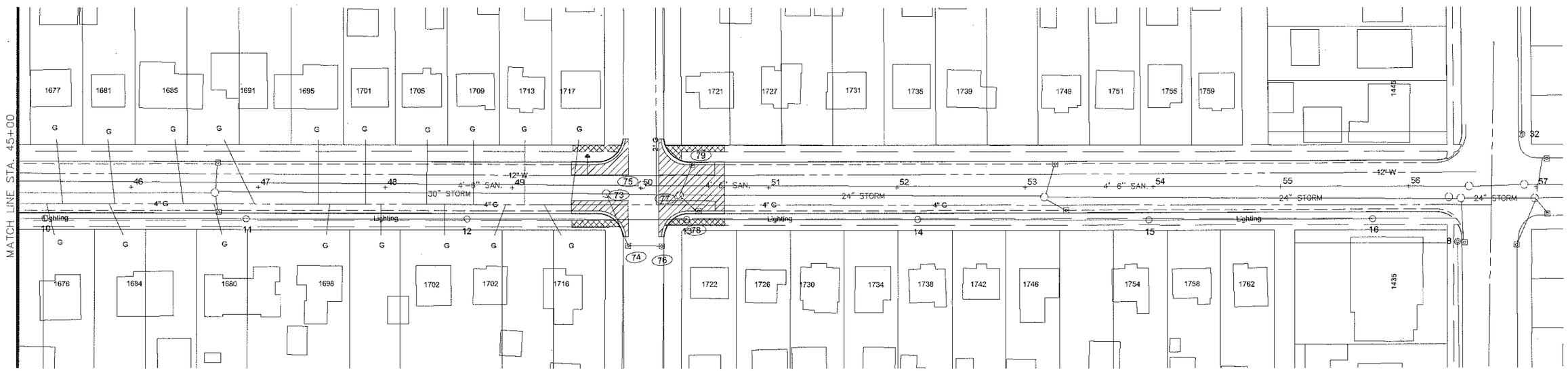

EXISTING AND REMOVAL PLAN

ARLINGTON AVENUE
STA 45+00. TO STA WHITEBEAR AVE

SAINT PAUL	DESIGNED	ASO	I HEREBY CERTIFY THAT THIS PLAN WAS PREPARED BY ME OR UNDER MY DIRECT SUPERVISION AND THAT I AM A DULY LICENSED PROFESSIONAL ENGINEER UNDER THE LAWS OF THE STATE OF MINNESOTA	PREPARED BY STREET ENGINEERING DIVISION FOR THE CITY OF ST. PAUL, DEPARTMENT OF PUBLIC WORKS	PROJECT: 19-P-1452	STATE AID PROJECT NUMBER:
	DRAWN	ASO		ARLINGTON AVENUE	DRAWER: 12	CAD NAME: PROJECTS/CURRENT/ARLINGTON/DWG
	APPROVED	BRM	Signature: Barbara R. Merrill ENGINEER Date: 4/19/2019 Lic. No. 43099		DWG. NO. 1618	DATE: 4/19/2019 SHEET NO. 18 OF 19 SHEETS

Z:\streets\streets\projects\current\Arlington SL- Mill overlay\DWG\ArlingtonBasemap1.dwg Apr 26, 2019 - 9:52am

RESTORE PAVEMENT WITH:
3" WEARING COURSE
4" NON-WEARING COURSE

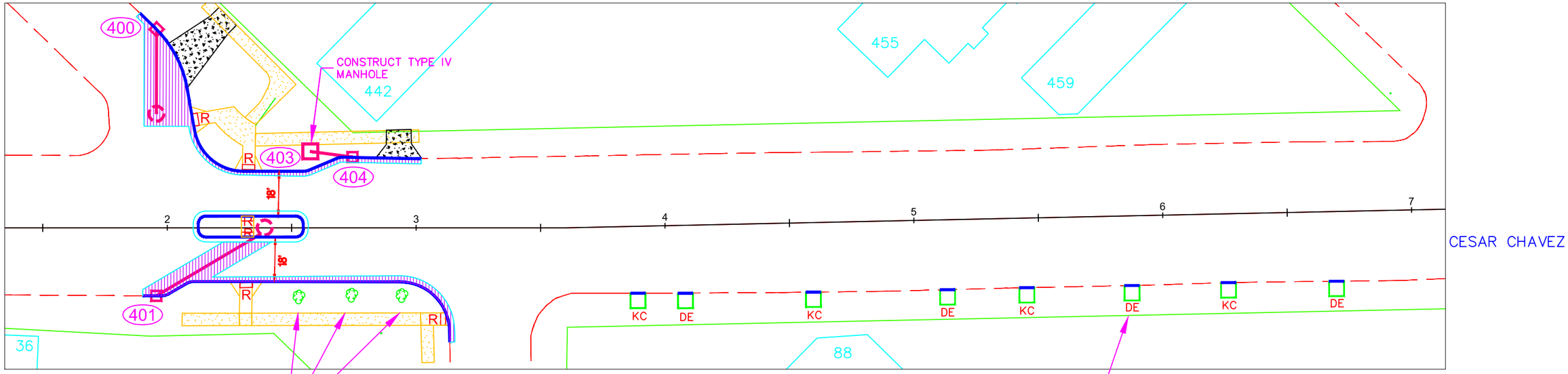

LIVINGSTON AVE ℄ STA. 1+94.00

PLANT DECIDUOUS (KENTUCKY COFFEE) TREE IN SOD BLVD

PROTECT EXISTING TREE IN BOULEVARD

CONGRESS ST ℄ STA. 3+30.00

CONSTRUCTION PLAN

SCALE IN FEET

40 30 20 10 0 20 40

ELECTRONIC SURVEY

NORTH

INSTALL TREE AND TREE PIT IN CONCRETE BLVD (SEE DETAIL ON SHEET 3)
KC : KENTUCKY COFFEE
DE : DISCOVERY ELM

SOUTH ROBERT ST ℄ STA. 7+12.00

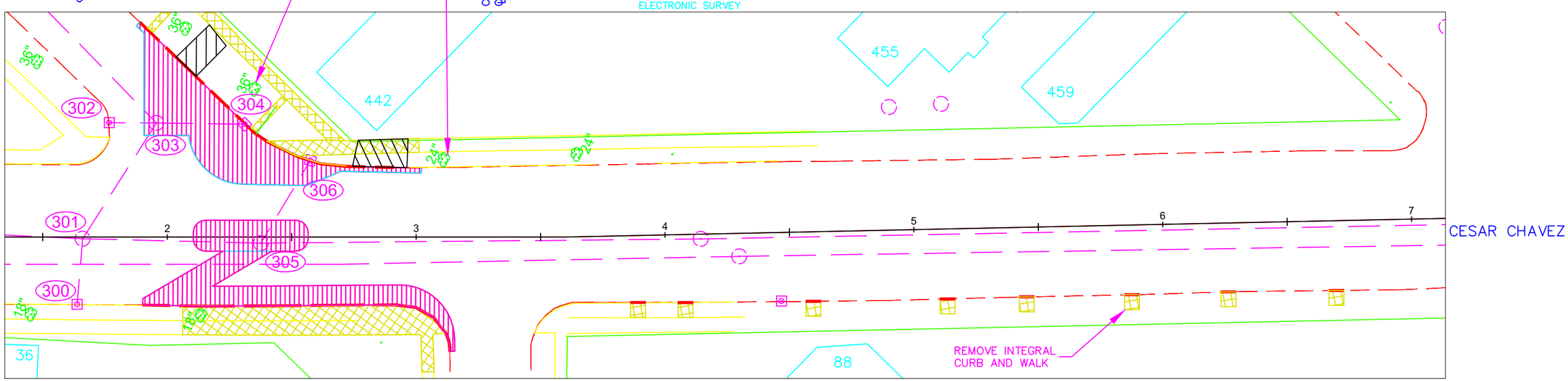

EXISTING AND REMOVAL PLAN

REVISED 6/10/19

DESIGNED	AFO	I HEREBY CERTIFY THAT THIS PLAN WAS PREPARED BY ME OR UNDER MY DIRECT SUPERVISION AND THAT I AM A DULY LICENSED PROFESSIONAL ENGINEER UNDER THE LAWS OF THE STATE OF MINNESOTA	PREPARED BY STREET ENGINEERING DIVISION FOR THE CITY OF ST. PAUL, DEPARTMENT OF PUBLIC WORKS
DRAWN	AFO	Signature: ENGINEER Date: 04/19/2019 Lic. No. 43099	Cesar Chavez
APPROVED	BRM		

PROJECT:	19-P-1449	STATE AID PROJECT NUMBER:	
DRAWER:	12	CAD NAME:	PROJECTS/CURRENT/CesarChavez
DWG. NO.		DATE: 04/19/2019	SHEET NO. 19 OF 19 SHEETS

Z:\streets\streets\projects\current\Arlington St.- Mill overlay\CesarChavez\DWG\Cesar Chavez Base 2.dwg Jun 10, 2019 - 8:28am