NOTES:

1. TAPER & FLOW LINE DEPRESSION SHOWN APPLY TO B-624 CURB. NO TAPER IS REQUIRED WHEN USED WITH INTEGRAL CURB & WALK (STD PLATE 1300D)
2. FRAME CASTING SHALL MATCH INSIDE OPENING OF BASIN. NO OFFSET WILL BE ALLOWED.
3. FRAME, GRATE AND CURB BOX AS PER STD. PL. 2211 OR AS NOTED IN THE PLANS.
4. AT THE CONTRACTORS OPTION, THE BOTTOM SLAB MAY ALSO BE CAST IN PLACE CONCRETE.
5. ALL CAST IN PLACE CONCRETE SHALL BE MN/DOT MIX 3G52 AND SHALL BE RODDED IN PLACE OR MECHANICALLY VIBRATED TO ASSURE DENSITY AND ELIMINATE HONEYCOMBING.
6. SEE STANDARD PLATE 3108A FOR USE WITH MOUNTABLE CURB.
7. CATCH BASIN LEAD TO BE 15" R.C.P., CL.V UNLESS OTHERWISE NOTED
8. IF MORE THAN 5" ADJUSTMENT IS NECESSARY OR IF MORE THAN ONE LIFT IS USED, 12" LONG (6) #4 REINFORCEMENT BARS, SHALL BE DRILLED AND GROUTED INTO PREVIOUSLY POURED 8" CONCRETE LIFT WALLS.
9. GROUT AND SHAPE INVERT TO PROMOTE POSITIVE DRAINAGE

I hereby certify that this plan, specification or report was prepared by me or under my direct supervision and that I am a duly Licensed Professional Engineer under the laws of the State of Minnesota

Aaron D. Hass

AARON D. HASS

Date 01-22-2026 Lic. No. 26424

APPROVED 2-19-2026

CITY ENGINEER

CITY OF ST. PAUL
DEPARTMENT OF PUBLIC WORKS

CATCH BASIN, TYPE 7B

Date of Revision JAN 2026

Standard Plate No. 2016D

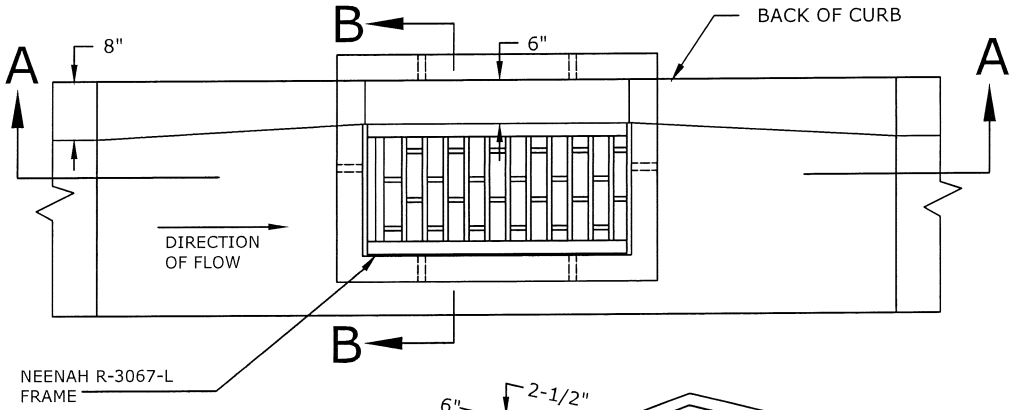

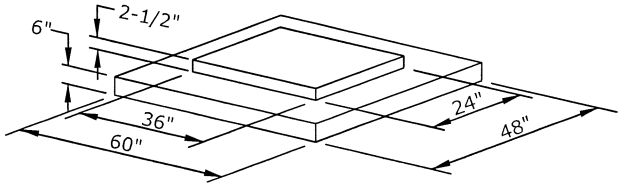

ISOMETRIC VIEW OF CATCH BASIN BASE

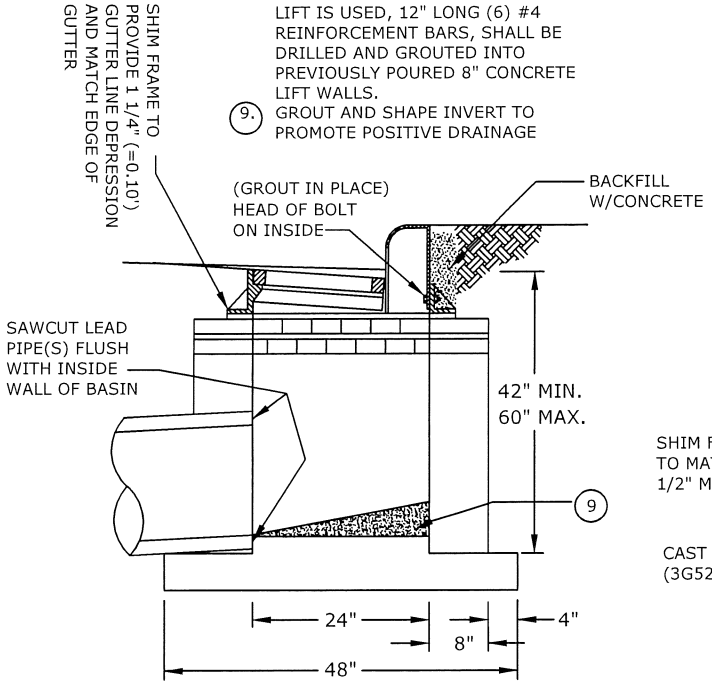

SEC. B-B

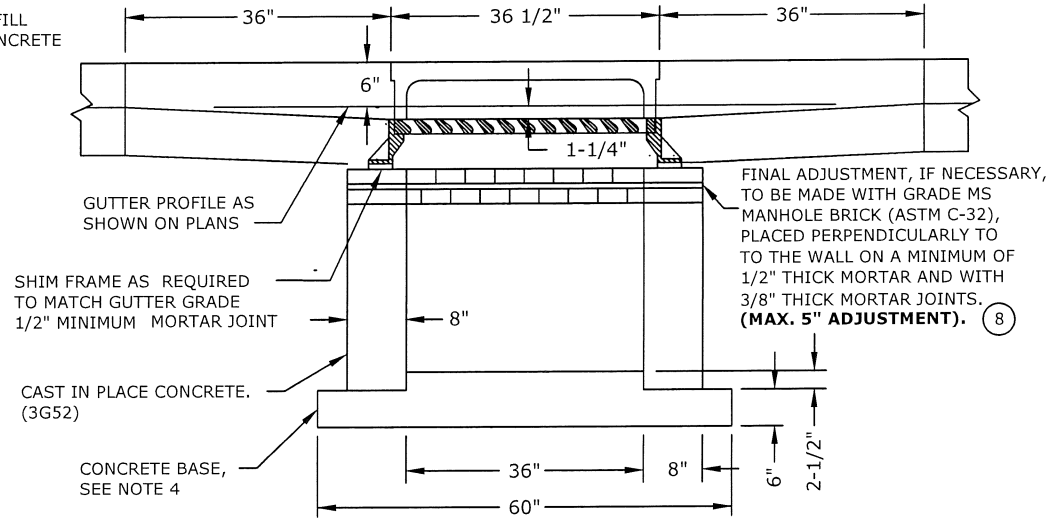

SEC. A-A